Double auto reverse deck 70FC911/00S/17S

Service
Service
Service

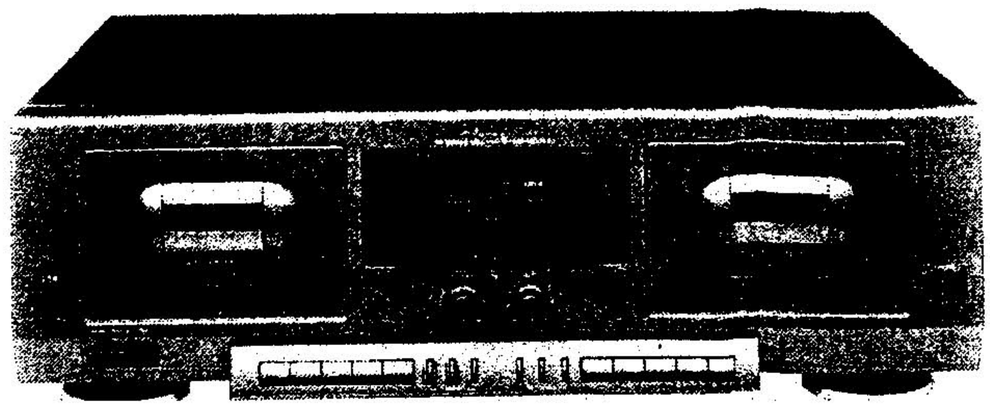

ServiceManual

Table of contents **page**

Connections and controls	2,3	Circuit diagram: - logic board - display board - keyboard	31,32,33
Specification	4		
Display	5	PCB: - AF board	11,12 19,20 21,22
Alignment	6,7,8		
Servicing hints	8	- RC bus board - power supply board - mains switch board - drive mechanism CRD 467 - drive mechanism CRD 468	27,28
Alignment layout	9		
Mechanical adjustments and checks	10		
Maintenance and lubrication instructions	10	- logic board - display board - keyboard	29,30
Display test mode	10		
Circuit diagram: - AF board - part 1	13,14,15	Wiring diagram	34,35,36
- AF board - part 2 - Display board	16,17,18	Exploded view: - list of mechanical parts drive mechanism CRD 468	37,38
- AF board - part 3	23,24	- list of mechanical parts drive mechanism CRD 467	39,40
- RC bus board - power supply board - mains switch board - drive mechanism CRD 467 - drive mechanism CRD 468	25,26	- list of mechanical parts cassette deck	41,42
		List of electrical parts	43

Safety regulations require that the set be restored to its orginal condition and that parts which are identical with those specified be used.

Published by Philips Consumer Electronics Printed in the Netherlands

©Copyright reserved

Subject to modification 4822 725 23019

CS 33 170

PHILIPS

CONNECTIONS AND CONTROLS

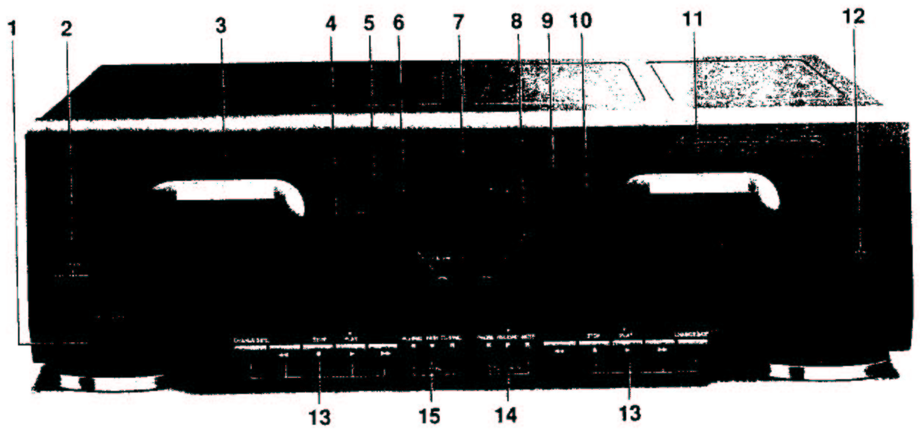

1 **POWER STANDBY/OFF** – for switching the cassette deck on and off

2 **OPEN** – for opening cassette holder 3 of deck A

3 **Cassette holder A** – for playback in both directions

4 **COUNTER RESET** – for returning the tape counter in the display to 0000

5 **COUNTER SELECT** – for selecting the tape counter to count for deck A or deck B

6 **REC BALANCE** – for adjusting the recording balance

7 **Display**

8 **REC LEVEL** – for adjusting the recording volume

9 **DOLBY NR** – for switching the Dolby Noise Reduction system on and off and selecting Dolby B or Dolby C

Dolby noise reduction manufactured under license from Dolby Laboratories Licensing Corporation. DOLBY and the double-D symbol ⧈ are trademarks of Dolby Laboratories Licensing Corporation.

10 **REVERSE MODE:**
⇄ – the tape stops at the end of each side.
⇉ – playback (+ recording for deck B) of both cassette sides, after which the tape stops at the end of the second side.
⟲ – continuous playback of both cassette sides
⟲ ⟲ – for continuous playback of both cassette sides on both decks

11 **Cassette holder B** – for recording and playback in both directions

12 **OPEN** – for opening cassette holder 11 of deck B

13 **Keyboard for deck A and deck B**

- ◄◄ – for fast winding in the opposite direction to that in which the tape is travelling
- STOP ■ – for stopping the tape transport
- PLAY ► – for starting playback
- ►► – for fast winding in the tape travel direction
- **CHANGE SIDE** – for reversing the tape travel direction of the playing deck (A or B) or reversing the tape travel direction of both decks when they are in STOP mode. After switching on the power, the unit always automatically displays the last directions chosen.

14 **RECORDING**

- **RECORD** – for starting recording.
- **MUTE** – for recording a pause (silent passage)
- **PAUSE** – for preparing or interrupting a recording

15 **DUBBING**

- **NORMAL** – for dubbing from deck A to B at normal speed
- **FAST** – for dubbing from deck A to B at high speed
- **CD SYNC.** – for synchro start of deck B and a CD player when recording from a Compact Disc (provided the CD player is connected via its ESI bus to your Philips system 900 series).

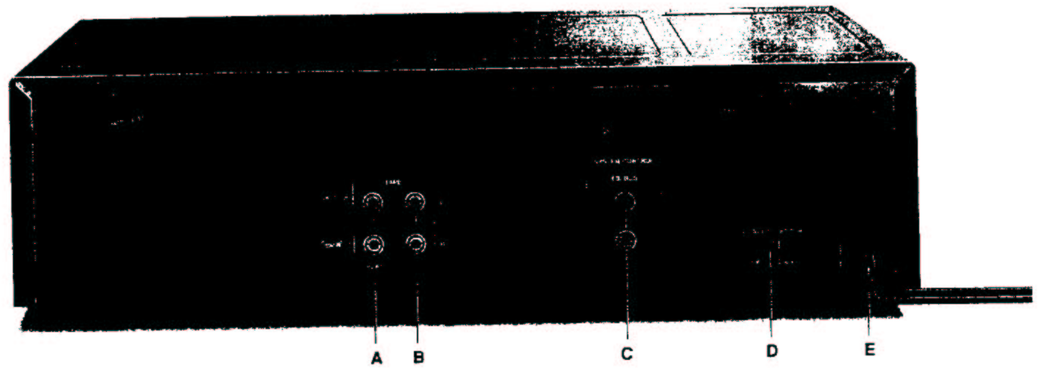

DISPLAY

The display shows:
- ⟲ ⟲ – when the reverse-mode continuous playback of both cassette sides on both decks is activated;
- 88:88 – tape transport counter or time of deck A and deck B;
- **DOLBY B/C** – when Dolby Noise Reduction System B or C is switched on;
- **MUTE** – during recording mute;
- **RECORD** – during any recording or dubbing;
  Starts flashing during recording pause mode;
- **CD SYNC.** – during a synchronized CD recording;
- **FRONT/BACK** – indicates the tape travel direction;
- **DUBBING** – during dubbing at normal speed;
- **HI SPEED DUBBING** – during high-speed dubbing;
- **DECK A/B** – indicating that the tape transport counter is counting for deck A or deck B;
- **Peak level meters** – indicating the output or recording level which can be adjusted with the REC BALANCE and REC LEVEL controls.

CONNECTIONS

A PLAY – output sockets for connection to the TAPE input sockets of your amplifier.

B REC – input sockets for connection to the TAPE output sockets of your amplifier.

C ESI BUS (Enhanced System Intelligence)
Remote control sockets for connecting up the equipment when you are incorporating the cassette deck in a HiFi system with ESI BUS connection (e.g. Philips 900 series)
Connect the ESI socket to the socket of the external equipment that uses the ESI remote-control system.

ESI BUS CONNECTIONS

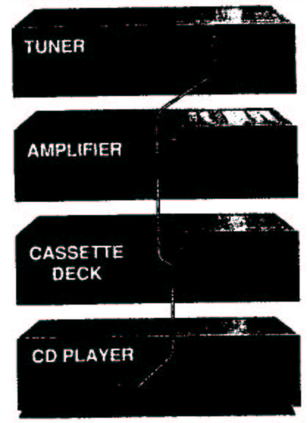

D Voltage selector 115 V/230 V – for selecting the mains voltage (not on all versions)

E MAINS – mains lead

SPECIFICATION

	Nominal value	Typical value	
Motor	: 12V - DC	: 12V - DC	
Cassette system	: Compact cassette		
Number of tracks	: 2x2 (stereo)		
Tape speed	: 4.76 cm/sec	: 4.76 cm/sec	
Speed deviation	: ± 2% (DIN)	: ± 1.5%	
Wow and flutter	: 0.3% (DIN)	: 0.15% (DIN)	
Fast wind time (C60)	: < 100 sec	: < 100 sec	
Bias and erase frequency	: 85kHz ± 5%	: 85kHz ± 5%	
Frequency range	DIN 45500:	IEC:	NAB:
Metal - type IV	: 40 - 15,000 Hz	: 30 - 17,000 Hz	30 - 18,000 Hz
Chromium - type II	: 40 - 15,000 Hz	: 30 - 17,000 Hz	30 - 18,000 Hz
Normal - type I	: 40 - 14,000 Hz	: 30 - 15,000 Hz	30 - 16,000 Hz
Signal/noise	DIN 45500:	IEC/DIN:	NAB:
Metal	: > 53 dB	: 58 dB	60 dB
Chromium	: > 56 dB	: 58 dB	60 dB
Normal	: > 53 dB	: 57 dB	59 dB
Improvement with Dolby B	: > 8.5 dB (CCIR)	: 10 dB	
Improvement with Dolby C	: > 18 dB (CCIR)	: 20 dB	
Distortion	: < 3%	: < 2%	

DISPLAY

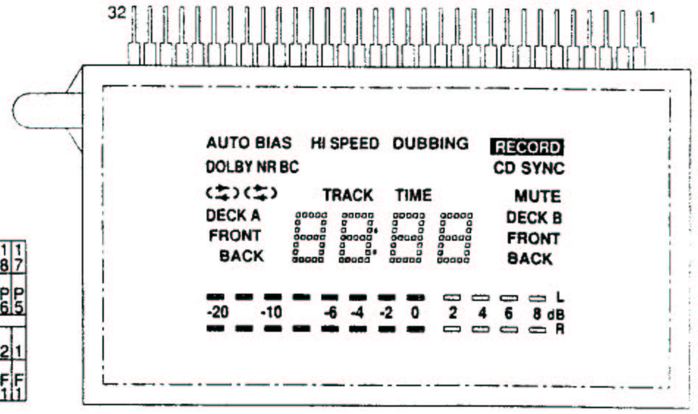

NOTE 1) F1, F2 - - - Filament
2) NP - - - - No pin
3) NC - - - - No connection
4) DL - - - - Datum Line
5) 1G~5G - - Grid

PIN CONNECTION

PIN NO.	32	31	30	29	28	27	26	25	24	23	22	21	20	19	18	17
CONNECTION	F2	F2	NP	P7	P6	P5	P4	P3	P2	P1	P0	P9	P8	P7	P6	P5

PIN NO.	16	15	14	13	12	11	10	9	8	7	6	5	4	3	2	1
CONNECTION	P4	P3	P2	P1	NC	NC	NC	NC	1G	2G	3G	4G	5G	NP	F1	F1

GRID ASSIGNMENT

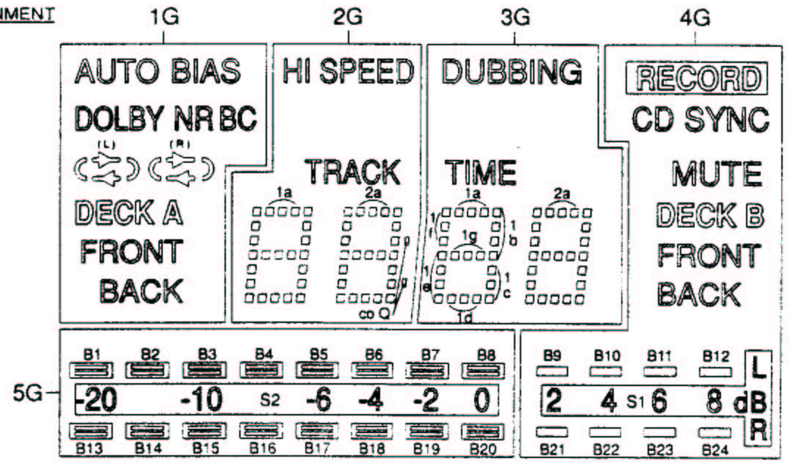

ANODE CONNECTION

	1G	2G	3G	4G	5G
P1	BACK	1a	1a	BACK	B1
P2	FRONT	1b	1b	FRONT	B2
P3	DECK A	1c	1c	DECK B	B3
P4	(L)	1d	1d	B9	B4
P5	(L)	1e	1e	B10	B5
P6	(L)	1f	1f	B11	B6
P7	(L)	1g	1g	B12	B7
P8	(R)	2a	2a	S1	B8
P9	-	2b	2b	B21	B13
P10	-	2c	2c	B22	B14
P11	-	2d	2d	B23	B15
P12	-	2e	2e	B24	B16
P13	-	2f	2f	-	B17
P14	C	2g	2g	-	B18
P15	B	coQ	-	MUTE	B19
P16	DOLBY NR	TRACK	TIME	CD SYNC	B20
P17	AUTO BIAS	HI SPEED	DUBBING	RECORD	S2

ALIGNMENT

General conditions

The following general conditions apply to the electrical measurements and adjustments, unless explicity stated otherwise.
- Ambient temperature 20 to 25°C.
- Dolby Nr in position off.
- Tape speed in position normal speed.
- Recording level control at maximum.
- Recording balance control at middle.
- The voltages have been measured relative to earth.

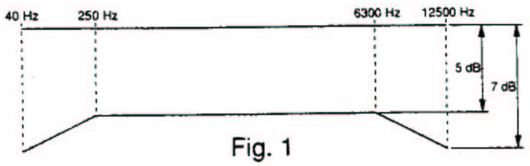

Fig. 1

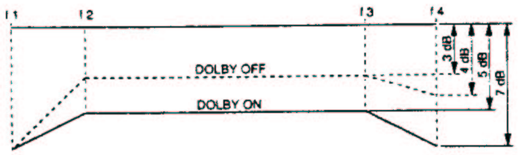

	f 1	f 2	f 3	f 4
Metal	40 Hz	125 Hz	8 kHz	14 kHz
Cr	40 Hz	125 Hz	8 kHz	14 kHz
Normal	40 Hz	125 Hz	8 kHz	13 kHz

Fig. 2

- The measurements and adjustments are related to the left-hand channel. The corresponding test points and adjusting elements for the right-hand channel are given in brackets.

Required test equipment and test cassettes

- AF generator
- DC voltmeter (DC-meter)
- AC millivoltmeter (mV-meter)
- Frequency counter
- Universal test cassette SBC419Cr-4822 397 30069 (250 nWb/m)

Notes:

•a. Prior to any measurement or adjustment with the tape running, heads and tape guides should be degaussed and cleaned.

•b. It is important that first the high speed is adjusted and hereafter the normal speed. The difference of speed between deck A and B may be 1% at the utmost, both for normal speed and high speed.

•c. Head azimuth
Direction of tape-threading to the right (FWD-PLAY) left-hand screw. Direction of tape-threading to the left (REV-PLAY) righthand screw. When the output levels of the right and left channel are different, set the channel with the lowest value to maximum. Use the same tape and tape section for the deck A and the deck B.

•d. If the accuracy requirements are less stringent a high quality chromium cassette may be used as an alternative.

•e. If this is not the case reduce the AF-signal (bias disabled) by as many dB's as the reading was too low or too high by means of R213 (R215).

•f. When one channel is adjusted this may slightly affect the adjustment of the other channel.
If the adjustment is correct the frequency response curve will be similar to curve b in Fig. 3 distortion < 2%.

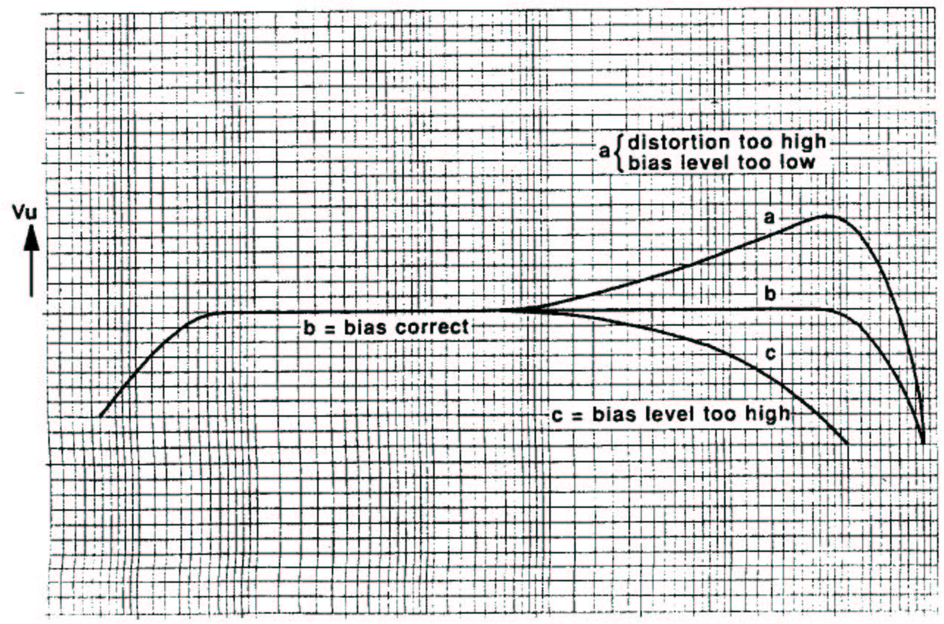

Fig. 3

Adjustment	Cassette	Recorder in position	Apply signal to	Measure	Read on	Adjust	Value
Tape speed (Dolby off) •b High speed	SBC419 3150Hz	Play (deck A or B)	-	MP-D1 (MP-D2)	Frequency counter	**To switch to high speed:** - Power off - Press simultaneously ◁◁ (deck A) and □ (deck B) and switch on with the power button. - Pressing ▷ (deck B): sets Deck B to line-out - Pressing ▷▷ (deck B): sets Deck A to line-out - At the end switch off and then on.	
						VR54 (A-deck)	6300Hz ± 0.1%
						VR61 (B-deck)	6300Hz ± 0.1%
						At the end make power off and then on.	
Normal speed	SBC419 3150Hz	Play (deck A or B)	-	MP-D1 (MP-D2)	Frequency counter	VR51 (A-deck)	3150Hz ± 0.1%
						VR58 (B-deck)	3150Hz ± 0.1%
Head azimuth	SBC419 10kHz	Play (deck A or B)	-	MP-D1 (MP-D2)	mV-meter	Head azimuth adjust screw •c	Max. output
Playback sensitivity (Dolby off)	SBC419 315Hz - 0 dB	Play (deck A or B)	-	MP-D1 (MP-D2)	mV-meter	R395 (R397) A-deck	490mV ± 0.5dB
						R353 (R354) B-deck	490mV ± 0.5dB
Playback frequency response (Dolby off)	SBC419 40Hz, to 18kHz	Play (deck A or B)	-	MP-D1 (MP-D2)	mV-meter	-	**A-deck** If Vout from the ratio 315Hz to 12.5kHz is +1 ±0.5dB open bridges **B7** (C351) / **B8** (C325) / **B9** (C327) left channel or **B10** (C352) / **B11** (C326) / **B12** (C328) right channel **B-deck** If V_{out} from the ratio 315Hz to 12.5kHz is +1 ±0.5dB open bridges **B1** (C301) / **B2** (C305) / **B3** (C313) left channel or **B4** (C303) / **B5** (C306) / **B6** (C315) right channel See graph Fig. 1
f-osc	Metal cassette	Deck B REC/PAUSE	-	MP R242	Frequency counter	L106	85kHz ± 1kHz
Recording calibration (Dolby off)	SBC419 side 2 •d	Deck B REC	500mV 400Hz, to LINE IN Fig. 4	MP-D1 (MP-D2)	mV-meter	Adjust REC. LEVEL POT.	120mV
				Make a recording and play it back			
		Play	-	MP-D1 (MP-D2)	mV-meter	-	120mV ±0.5dB •e
BIAS (Dolby off)	SBC419 side 2 •d	Deck B REC	500mV f_1 = 400Hz and f_2 = 12.5kHz, to LINE IN Fig. 4	MP-D1 (MP-D2)	mV-meter	Adjust REC. LEVEL POT.	22mV
				Make a recording and play it back			
		Play	-	MP-D1 (MP-D2)	mV-meter	-	The levels V_{out} (f_1 = 400Hz) and V_{out} (f_2 = 12.5kHz) must not differ by more than ±0.5dB. If V_{out} (f_1 = 400Hz) to V_{out} (f_2 = 12.5kHz) is greater than 1dB, adjust the **BIAS** with **C136 (C146)**. See graph Fig. 2 •f
MULTIPLEX filters (Dolby off)	Arbitrary cassette	Deck B REC/PAUSE (REC. LEVEL POT. max.)	120mV 400Hz, to LINE IN Fig. 4	MP-D1 (MP-D2)	mV-meter	-	$f_{(400Hz)}$ = 0dB (ref.)
			120mV 19kHz, to LINE IN Fig. 4	MP-D1 (MP-D2)	mV-meter	F101 (F102)	$f_{(19KHz)} \leq$ -30dB

Fig. 4

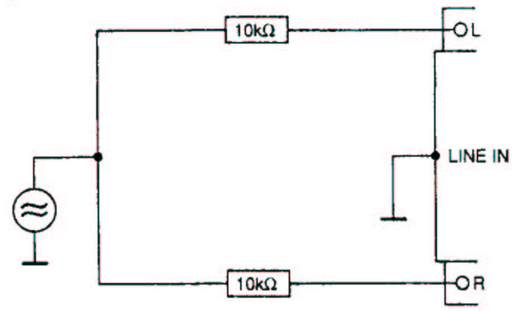

SERVICING HINTS

1. ESD

All ICs and many other semi-conductors are susceptible to electrostatic discharges (ESD). Careless handling during repair can reduce life drastically.
When repairing, make sure that you are connected with the same potential as the mass of the set via a wrist wrap with resistance. Keep components and tools also at this potential. See Service Information A86 - 1000 for this.

2. Warning

If the set is connected to mains voltage, there is a risk of shock-hazard voltages after the set is deceased.

2. DOLBY HINTS

Dolby noise reduction manufactured under license from Dolby Laboratories Licensing Corporation.
"Dolby", the double-D symbol DOLBY B-C NR are trademarks of Dolby Laboratories Licensing Corporation.

3. ELUCIDATIONS

⬡ Measuring point
○ Trimming element

ALIGNMENT LAYOUTS

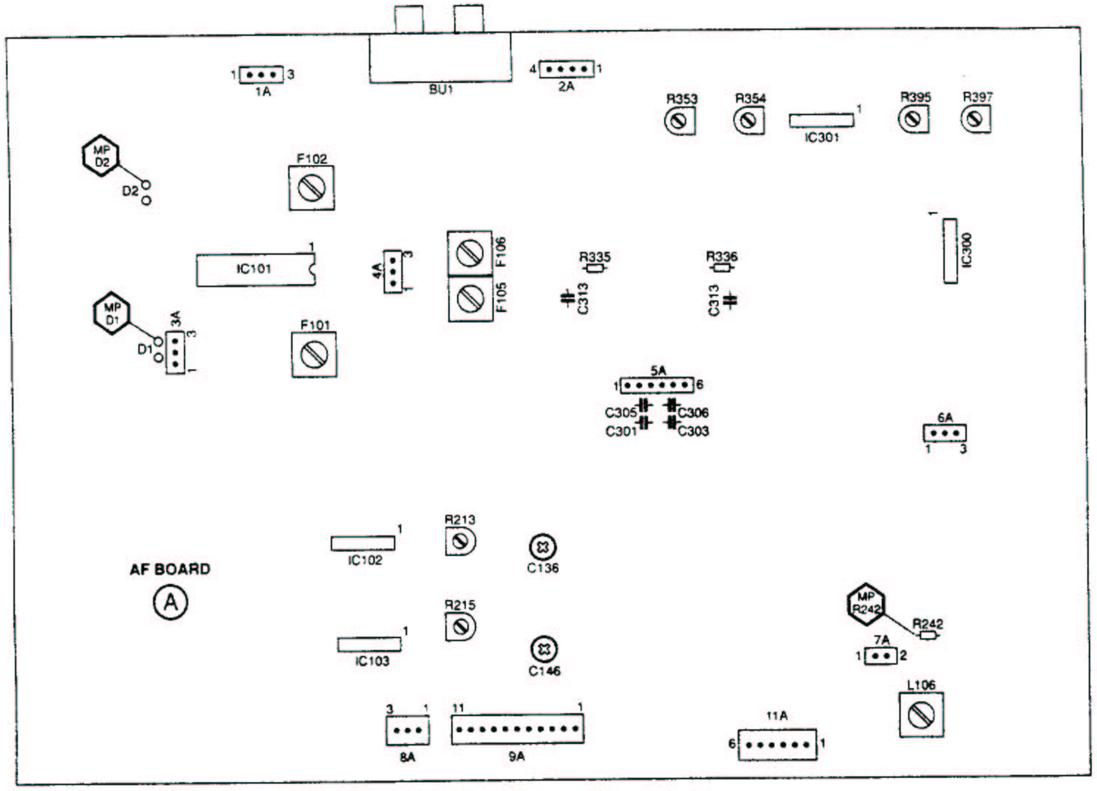

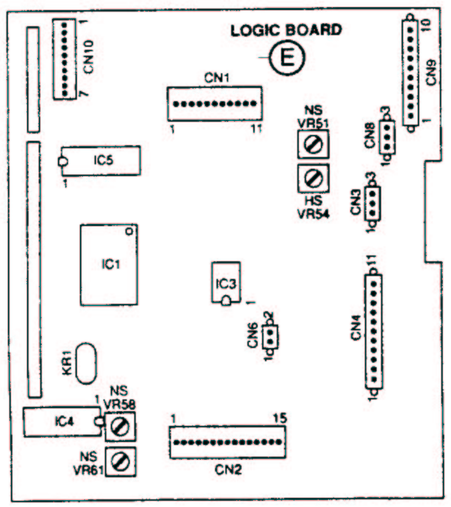

MECHANICAL ADJUSTMENT AND CHECKS

The tape deck cannot be adjusted without mechanism control circuit.

The torque values

Place a torque test cassette (e. g. test cassette 4822 395 30054) in the set.
The torque values to be measured are specified as follows:

- play take-up torque	40-70	grcm
- supplying reel drag	2-6	grcm
- FF/REW torque	85-170	grcm

MAINTENANCE AND LUBRICATION INSTRUCTIONS

It is advised to clean the tape deck and lubricate the principal points after approx. 500 hours of operation.

1. To be cleaned with alcohol or spirit

- Heads
- Capstan and pressure roller
- Pulleys
- Belts

Clean the heads, using a soft cloth or a wadded stick.

2. Lubrication instructions

- Shell Alvania 2 4822 389 10001
  (To be used for ball bearings, gearwheels, shafts.)
- Shell Clavis 15 4822 390 10048
  (To be used for shafts and plain bearings.)
- Silicon grease 5322 390 20011
  (To be used for lubricating plastic parts.)
- BP super visco static 20W/50 4822 390 10069
  (To be used for lubricating flywheel bearing.)

DISPLAY TEST MODE

To start the Display Test press and hold the buttons "⏮" (rewind key on deck A) and "⏭" (forwind key on deck B) simultaneously while switching on with the "POWER STAND BY / OFF" button.

The Display Test can be stopped only by switching the cassette recorder off.

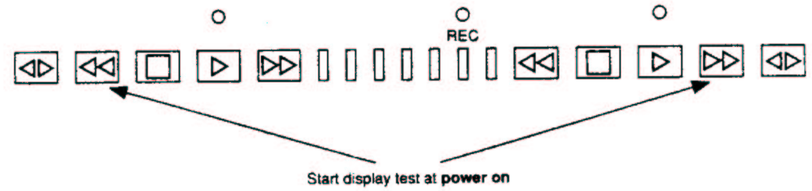

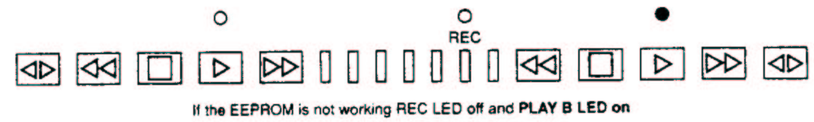

AF PCB

component side

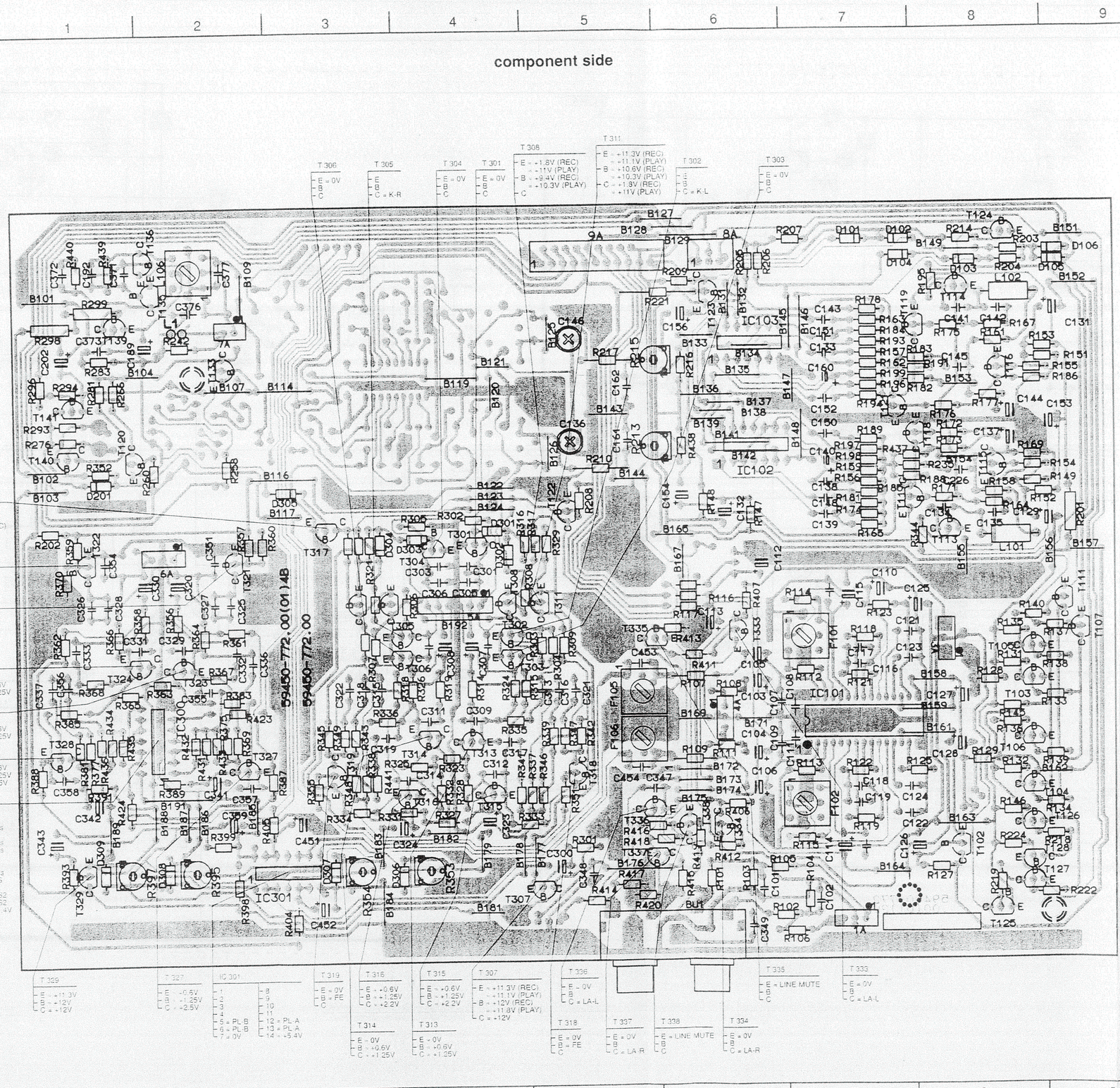

1 A	A 7	C 328	C 1	R 165	D 7	R 354	A 3
2 A	A 5	C 329	C 2	R 167	E 8	R 355	B 3
3 A	C 8	C 330	C 2	R 169	D 8	R 356	C 2
4 A	B 6	C 331	C 1	R 171	D 8	R 357	D 2
5 A	C 4	C 332	C 2	R 172	E 8	R 358	C 2
6 A	D 2	C 333	C 1	R 173	D 8	R 359	D 1
7 A	E 2	C 336	C 2	R 174	D 7	R 360	D 2
8 A	F 6	C 337	C 1	R 175	E 8	R 361	C 2
9 A	F 5	C 341	B 2	R 176	E 8	R 362	C 1
11 A	F 3	C 342	B 1	R 177	E 8	R 363	C 2
BU 1	A 6	C 343	A 1	R 178	F 7	R 364	C 2
D 1	C 8	C 347	B 5	R 181	D 7	R 365	C 1
D 2	B 8	C 348	A 5	R 182	E 8	R 366	C 1
L 1	E 2	C 349	A 6	R 183	E 8	R 367	C 2
P 1	E 1	C 351	D 2	R 184	E 7	R 368	C 1
P 2	E 1	C 352	D 1	R 185	D 7	R 369	B 2
C 101	A 6	C 353	D 2	R 186	E 8	R 370	D 1
C 102	A 7	C 354	D 1	R 188	D 7	R 375	B 2
C 103	C 6	C 355	C 2	R 189	E 7	R 377	B 1
C 104	B 6	C 356	C 1	R 191	E 8	R 381	B 1
C 105	C 6	C 357	B 2	R 193	E 7	R 383	C 2
C 106	B 6	C 358	B 1	R 194	E 7	R 385	B 1
C 107	C 6	C 359	B 2	R 195	F 8	R 387	B 2
C 108	B 7	C 371	F 1	R 196	E 7	R 388	B 1
C 109	B 6	C 372	F 1	R 197	D 7	R 389	B 2
C 110	C 7	C 373	E 1	R 198	D 7	R 391	B 1
C 111	B 7	C 374	D 4	R 199	E 7	R 393	A 1
C 112	D 6	C 375	F 4	R 201	D 9	R 395	A 2
C 113	C 6	C 376	F 2	R 202	D 1	R 397	A 1
C 114	A 7	C 377	F 2	R 203	F 8	R 398	A 2
C 115	C 7	C 451	B 3	R 204	F 8	R 399	A 2
C 116	C 7	C 452	A 3	R 205	F 6	R 404	A 3
C 117	C 7	C 453	C 5	R 206	F 6	R 405	B 2
C 118	B 7	C 454	B 5	R 207	F 7	R 406	B 6
C 119	B 7	D 101	F 7	R 208	D 5	R 407	C 6
C 121	C 7	D 102	F 7	R 209	F 6	R 411	C 6
C 122	B 7	D 103	F 8	R 210	D 5	R 412	A 6
C 123	C 7	D 104	F 7	R 213	E 5	R 413	C 6
C 124	B 7	D 105	F 9	R 214	F 8	R 414	A 5
C 125	C 7	D 106	F 9	R 215	E 5	R 415	A 5
C 126	A 7	D 201	D 1	R 216	E 6	R 416	B 5
C 127	C 8	D 301	D 4	R 217	E 5	R 417	A 5
C 128	B 8	D 302	D 4	R 218	A 9	R 418	A 5
C 129	D 8	D 303	D 4	R 219	A 8	R 419	A 6
C 131	F 9	D 304	D 3	R 221	F 6	R 420	A 5
C 132	D 6	D 305	D 3	R 222	A 9	R 423	B 2
C 134	D 8	D 306	A 3	R 224	A 8	R 424	B 1
C 135	D 8	D 307	A 3	R 230	E 3	R 431	B 2
C 136	E 7	D 308	A 2	R 231	E 3	R 432	B 2
C 136	E 5	D 309	A 1	R 232	E 3	R 433	B 2
C 137	E 8	F 101	C 7	R 235	D 7	R 434	B 1
C 138	D 7	F 102	B 7	R 239	E 4	R 435	B 1
C 139	D 7	F 103	D 4	R 242	E 2	R 436	B 1
C 140	D 7	F 104	E 4	R 248	E 2	R 437	D 7
C 141	F 8	F 105	C 5	R 249	E 2	R 438	E 6
C 142	F 8	F 106	B 5	R 251	D 2	R 439	F 1
C 143	E 7	IC 101	B 7	R 252	E 2	R 440	F 1
C 144	E 8	IC 102	D 6	R 253	D 2	R 441	B 3
C 145	E 8	IC 103	E 6	R 254	E 2	T 102	A 8
C 146	E 5	IC 104	E 3	R 255	E 2	T 103	C 8
C 148	D 7	IC 300	B 2	R 256	F 3	T 104	B 8
C 150	E 7	IC 301	A 3	R 257	F 2	T 105	C 8
C 151	E 7	L 101	D 8	R 258	D 2	T 106	B 8
C 152	E 7	L 102	F 8	R 260	D 2	T 107	C 9
C 153	E 8	L 105	E 4	R 264	E 3	T 111	C 9
C 154	D 6	L 106	F 2	R 266	E 1	T 113	D 8
C 156	F 6	L 108	E 4	R 268	E 4	T 114	F 8
C 157	E 3	R 101	A 6	R 276	E 1	T 115	D 8
C 158	F 3	R 102	A 6	R 281	E 1	T 116	E 8
C 160	E 7	R 103	A 6	R 283	E 1	T 117	D 7
C 161	E 5	R 104	A 7	R 293	E 1	T 118	E 8
C 162	E 5	R 105	A 6	R 294	E 1	T 119	E 7
C 163	E 4	R 106	A 7	R 296	D 1	T 120	D 1
C 164	E 4	R 107	C 6	R 297	E 3	T 121	E 7
C 165	D 5	R 108	C 6	R 298	E 1	T 122	D 5
C 166	E 5	R 109	B 6	R 299	F 1	T 123	F 6
C 168	D 4	R 111	B 6	R 301	A 5	T 124	F 8
C 169	E 4	R 112	C 7	R 302	D 4	T 125	A 8
C 171	D 3	R 113	B 7	R 303	C 5	T 126	B 8
C 175	E 3	R 114	C 7	R 304	C 5	T 127	A 8
C 176	E 4	R 115	A 7	R 305	D 4	T 128	A 8
C 179	E 3	R 116	C 6	R 306	C 4	T 130	E 2
C 182	D 4	R 117	C 6	R 307	C 3	T 131	E 2
C 184	E 3	R 118	C 7	R 308	C 4	T 132	E 2
C 185	F 3	R 119	B 7	R 309	C 5	T 133	E 2
C 186	E 4	R 121	C 7	R 314	C 4	T 135	F 2
C 188	E 3	R 122	B 7	R 315	C 4	T 136	E 2
C 189	E 2	R 123	C 7	R 316	D 4	T 139	E 1
C 191	E 4	R 125	B 7	R 317	D 5	T 140	D 1
C 192	F 1	R 127	A 8	R 318	C 3	T 141	E 1
C 193	F 4	R 128	C 8	R 319	C 4	T 301	D 4
C 195	F 4	R 129	B 8	R 321	D 3	T 302	C 4
C 197	E 3	R 131	C 8	R 323	B 4	T 303	C 4
C 202	E 1	R 132	B 8	R 324	C 4	T 304	D 4
C 226	D 8	R 133	C 9	R 325	B 4	T 305	C 4
C 300	A 5	R 134	B 9	R 326	C 4	T 306	C 4
C 301	D 4	R 135	C 8	R 327	B 4	T 307	A 5
C 303	D 4	R 136	B 8	R 328	B 4	T 308	C 4
C 305	C 4	R 137	C 9	R 329	D 5	T 311	C 5
C 306	C 4	R 138	C 9	R 331	B 4	T 313	B 4
C 307	C 4	R 139	B 9	R 332	B 4	T 314	B 4
C 308	C 4	R 140	C 8	R 333	B 4	T 315	B 4
C 309	B 4	R 145	B 8	R 334	B 3	T 316	B 4
C 311	B 4	R 146	B 8	R 335	B 4	T 317	D 3
C 312	B 4	R 147	D 6	R 336	B 3	T 318	B 5
C 313	C 5	R 148	D 6	R 337	B 5	T 319	B 3
C 314	B 4	R 149	D 8	R 338	B 3	T 321	D 2
C 315	C 3	R 151	E 8	R 339	B 5	T 322	D 1
C 316	C 5	R 152	D 8	R 341	B 4	T 323	C 2
C 317	B 4	R 153	E 8	R 342	B 5	T 324	C 1
C 318	C 3	R 154	D 8	R 343	B 3	T 327	B 2
C 319	B 3	R 155	E 8	R 344	D 8	T 328	B 1
C 320	C 2	R 156	D 7	R 345	B 3	T 329	A 1
C 321	C 5	R 157	E 7	R 346	B 5	T 333	C 6
C 322	C 3	R 158	D 8	R 347	B 5	T 334	B 6
C 323	B 4	R 159	D 7	R 348	B 3	T 335	C 5
C 324	B 4	R 161	E 8	R 349	B 3	T 336	B 5
C 325	C 2	R 162	E 7	R 351	B 5	T 337	A 5
C 326	C 1	R 163	E 7	R 352	D 1	T 338	B 6
C 327	C 2	R 164	D 8	R 353	A 4		

CIRCUIT DIAGRAM AF BOARD - PART 1

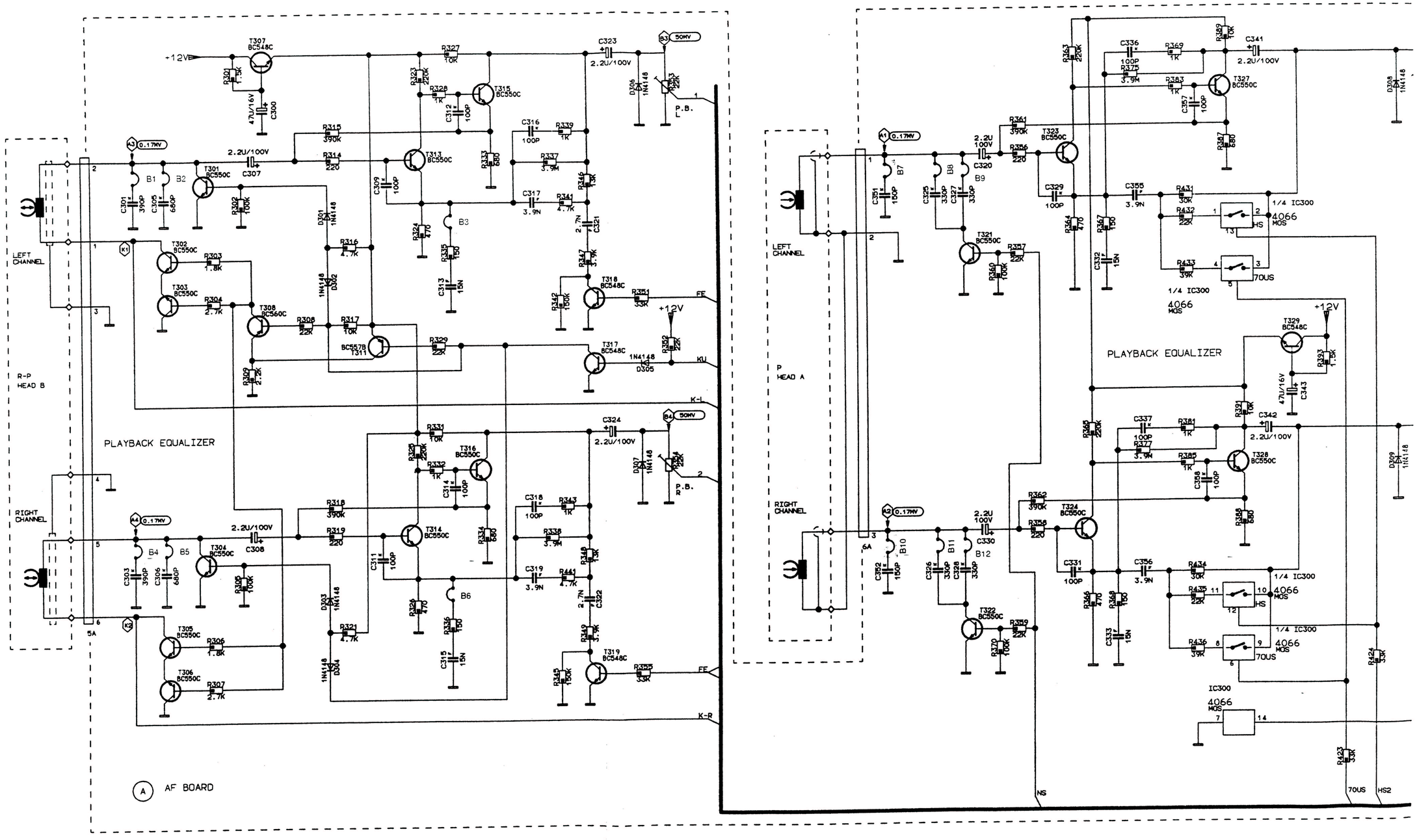

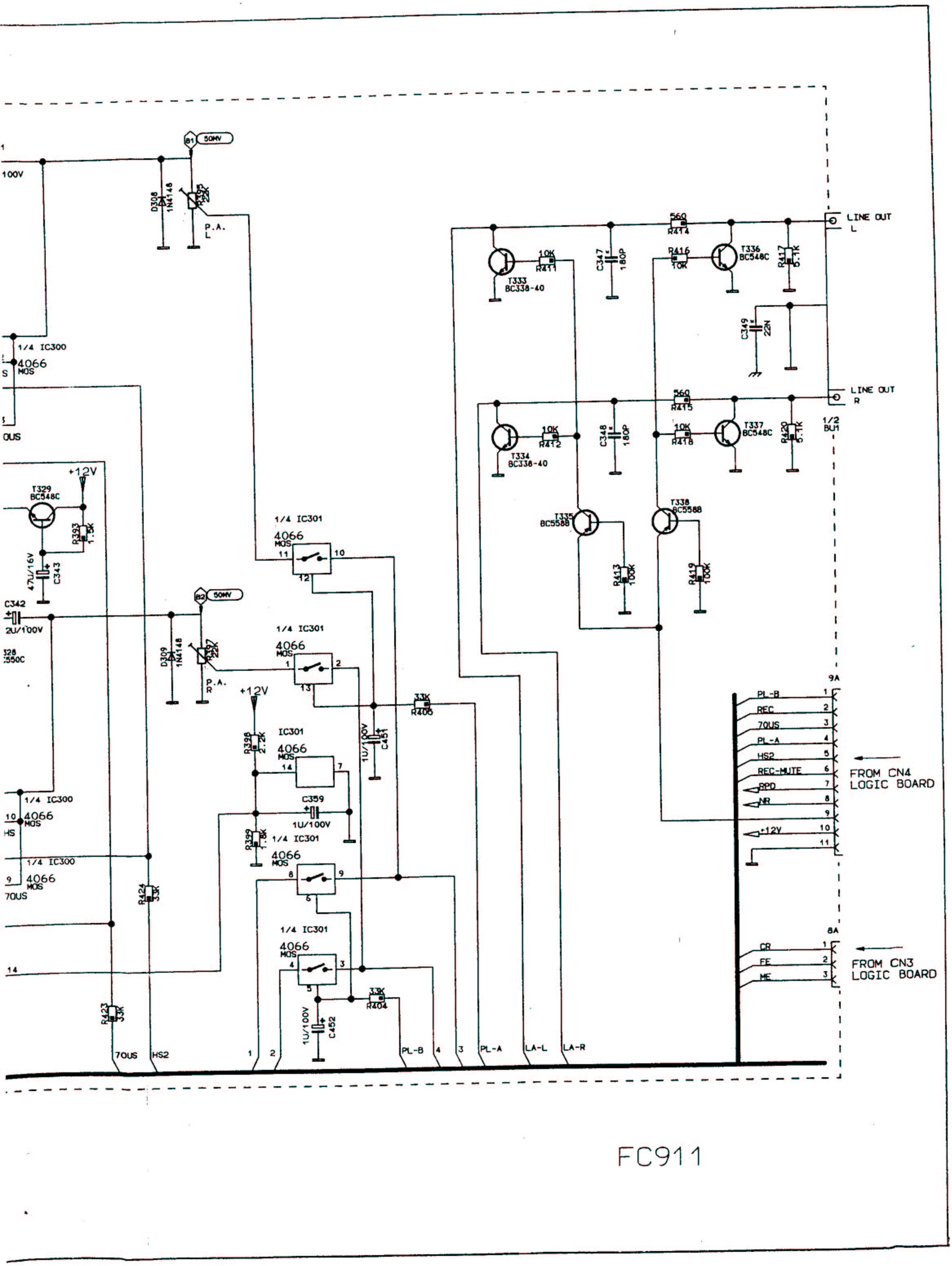
B1 50MV
D308 1N4148
R395 22K
P.A. L
1/4 IC300 4066 MOS
100V
OUS
+12V
T329 BC548C
R393 1.5K
47U/16V C343
C342 2U/100V
328 550C
1/4 IC301 4066 MOS
B2 50MV
D309 1N4148
R397 22K
P.A. R
+12V
R398 2.2K
IC301 4066 MOS
1U/100V C451
R406 33K
C359 1U/100V
R399 1.5K
1/4 IC301 4066 MOS
1/4 IC300 4066 MOS
10
HS
1/4 IC300 4066 MOS
9
70US
R424 33K
14
R423 33K
1/4 IC301 4066 MOS
1U/100V C452
R404 33K
70US
HS2
PL-B
PL-A
LA-L
LA-R
T333 BC338-40
10K R411
C347 180P
560 R414
R416 10K
T336 BC548C
R417 5.1K
LINE OUT L
C349 22N
T334 BC338-40
10K R412
C348 180P
560 R415
10K R418
T337 BC548C
R420 5.1K
LINE OUT R
1/2 BU1
T335 BC5588
T338 BC5588
R413 100K
R419 100K
9A
PL-B 1
REC 2
70US 3
PL-A 4
HS2 5
REC-MUTE 6
RPD 7
MR 8
9
+12V 10
11
FROM CN4 LOGIC BOARD
8A
CR 1
FE 2
ME 3
FROM CN3 LOGIC BOARD

FC911

CIRCUIT DIAGRAM: DISPLAY BOARD, AF BOARD - PART 2

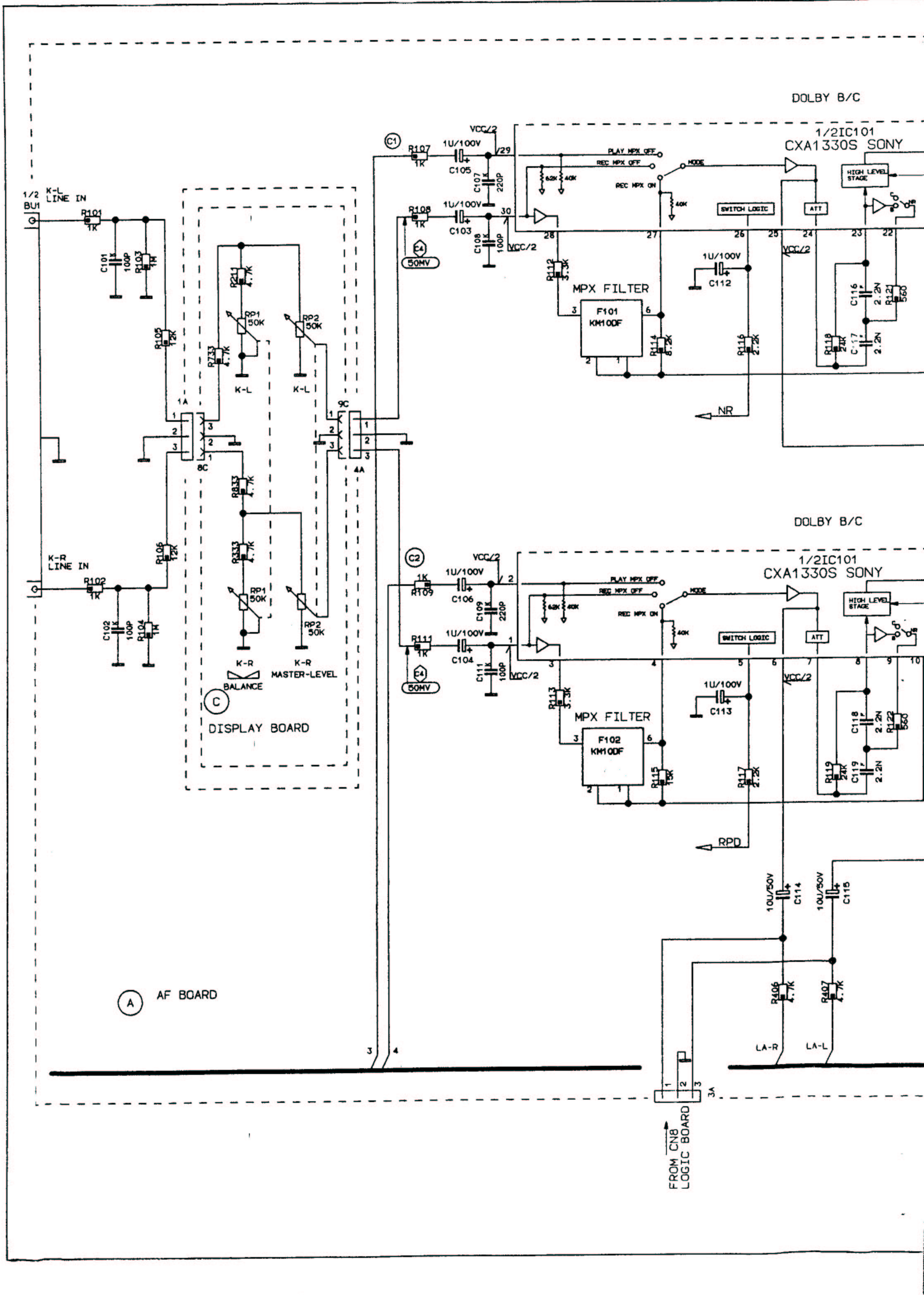

CS 33 177

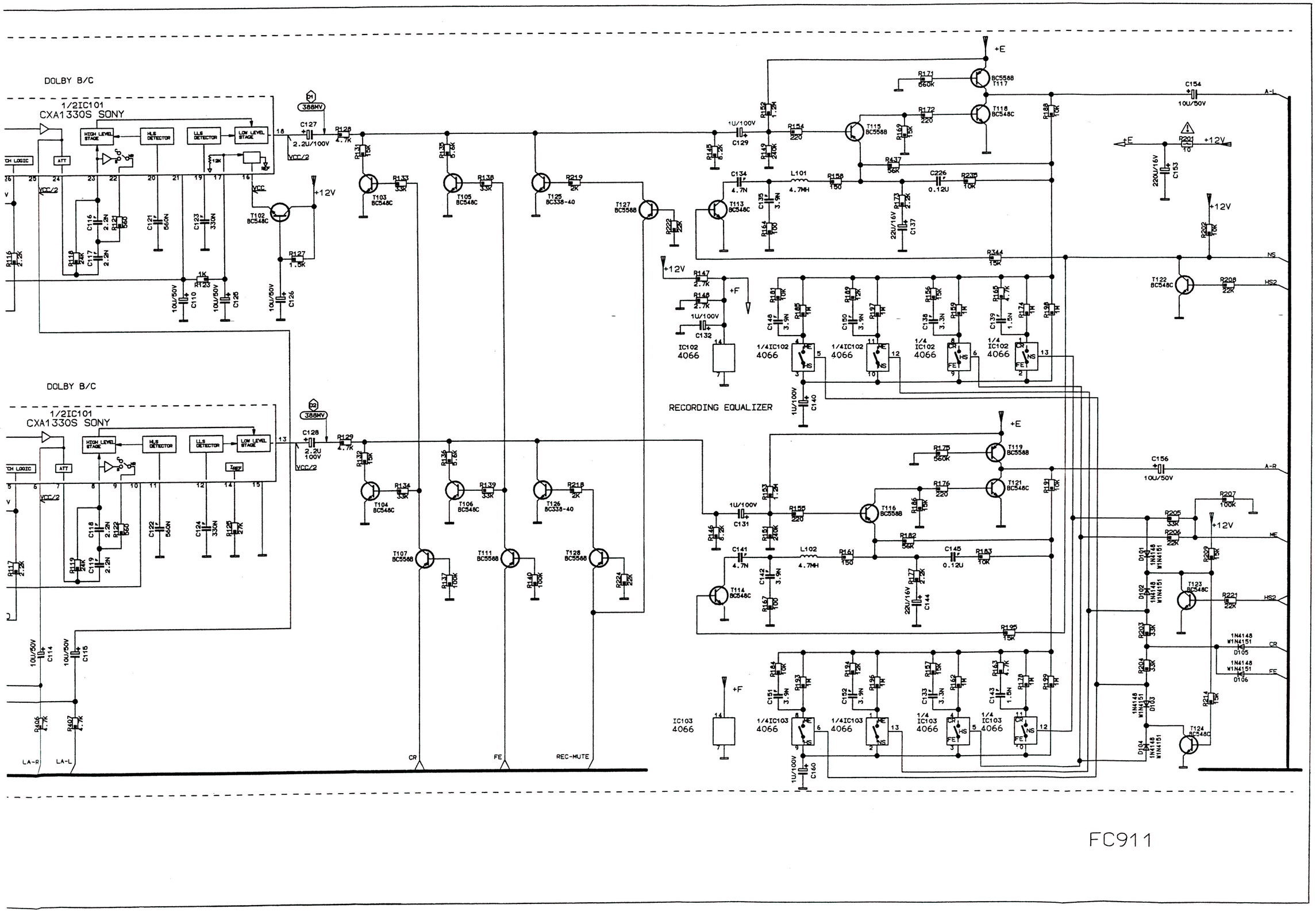
DOLBY B/C
1/2IC101
CXA1330S SONY
HIGH LEVEL STAGE
HLS DETECTOR
LLS DETECTOR
LOW LEVEL STAGE
ATT
VCC/2
VCC
+12V
+E
+F
RECORDING EQUALIZER
IC102
4066
IC103
4066
1/4IC102
1/4IC103
1/4
A-L
A-R
NS
HS2
ME
CR
FE
REC-MUTE
LA-R
LA-L

FC911

AF PCB

component side

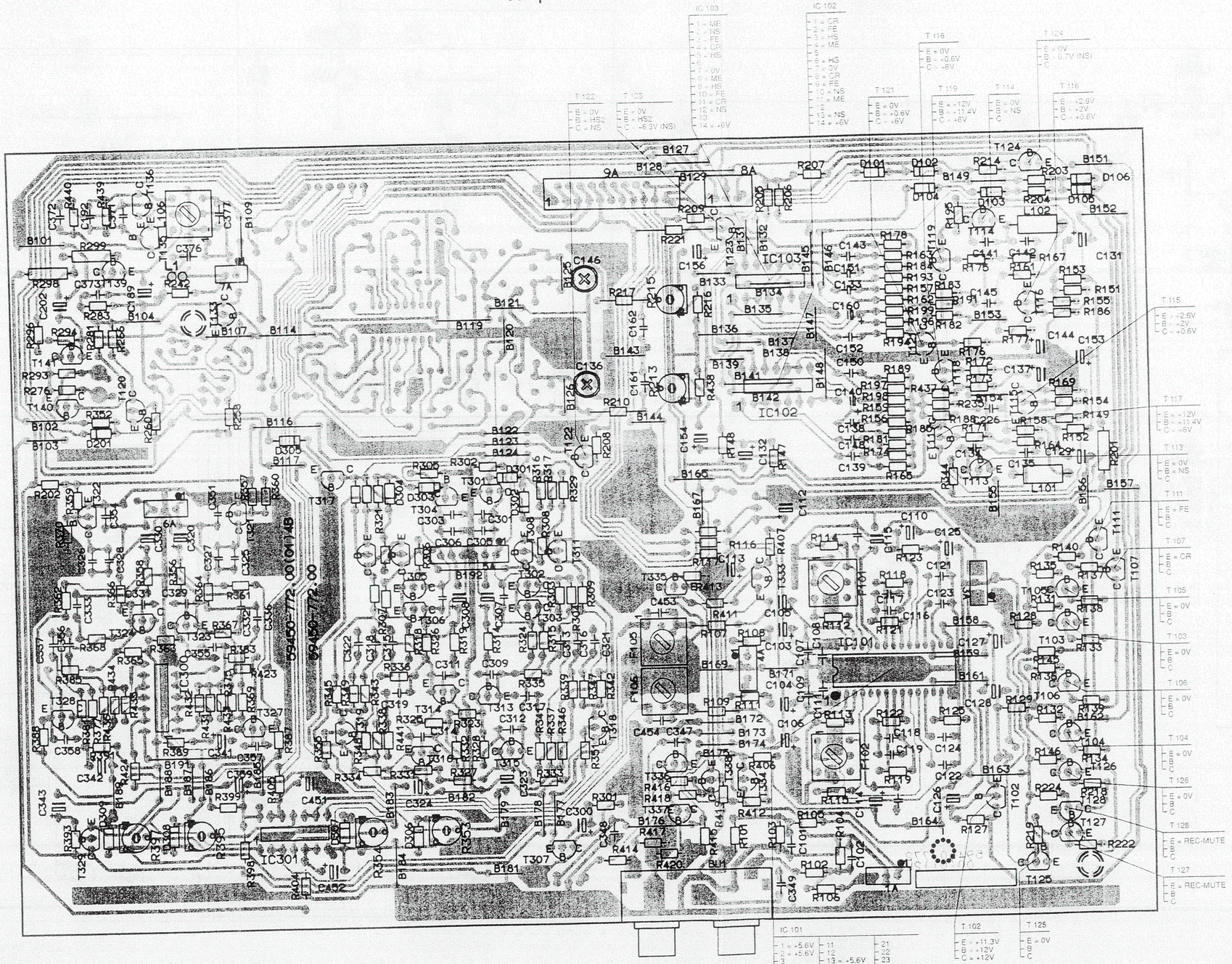

1A	A7	C 328	C1	R 165	D7	R 354	A3
2A	A5	C 329	C2	R 167	E8	R 355	B3
3A	C8	C 330	C2	R 169	D8	R 356	C2
4A	B6	C 331	C1	R 171	D8	R 357	D2
5A	C4	C 332	C2	R 172	E8	R 358	C2
6A	D2	C 333	C1	R 173	D8	R 359	D1
7A	E2	C 336	C2	R 174	D7	R 360	D2
8A	F6	C 337	C1	R 175	E8	R 361	C2
9A	F5	C 341	B2	R 176	E8	R 362	C1
11A	F3	C 342	B1	R 177	E8	R 363	C2
BU1	A6	C 343	A1	R 178	F7	R 364	C2
D1	C8	C 347	B5	R 181	D7	R 365	C1
D2	B8	C 348	A5	R 182	E8	R 366	C1
L1	E2	C 349	A6	R 183	E8	R 367	C2
P1	E1	C 351	D2	R 184	E7	R 368	C1
P2	E1	C 352	D1	R 185	D7	R 369	B2
C 101	A6	C 353	D2	R 186	E8	R 370	D1
C 102	A7	C 354	D1	R 188	D7	R 375	B2
C 103	C6	C 355	C2	R 189	E7	R 377	B1
C 104	B6	C 356	C1	R 191	E8	R 381	B1
C 105	C6	C 357	B2	R 193	E7	R 383	C2
C 106	B6	C 358	B1	R 194	E7	R 385	B1
C 107	C6	C 359	B2	R 195	F8	R 387	B2
C 108	B7	C 371	F1	R 196	E7	R 388	B1
C 109	B6	C 372	F1	R 197	D7	R 389	B2
C 110	C7	C 373	E1	R 198	D7	R 391	B1
C 111	B7	C 374	D4	R 199	E7	R 393	A1
C 112	D6	C 375	F4	R 201	D9	R 395	A2
C 113	C6	C 376	F2	R 202	D1	R 397	A1
C 114	A7	C 377	F2	R 203	F8	R 398	A2
C 115	C7	C 451	B3	R 204	F8	R 399	A2
C 116	C7	C 452	A3	R 205	F6	R 404	A3
C 117	C7	C 453	C5	R 206	F6	R 405	B2
C 118	B7	C 454	B5	R 207	F7	R 406	B6
C 119	B7	D 101	F7	R 208	D5	R 407	C6
C 121	C7	D 102	F7	R 209	F6	R 411	C6
C 122	B7	D 103	F8	R 210	D5	R 412	A6
C 123	C7	D 104	F7	R 213	F8	R 413	C6
C 124	B7	D 105	F9	R 214	E5	R 414	A5
C 125	C7	D 106	F9	R 215	E5	R 415	A6
C 126	A7	D 201	D1	R 216	E6	R 416	B5
C 127	C8	D 301	D4	R 217	E5	R 417	A5
C 128	B8	D 302	D4	R 218	A9	R 418	A5
C 129	D8	D 303	D4	R 219	A8	R 419	A6
C 131	F9	D 304	D3	R 221	F6	R 420	A5
C 132	D6	D 305	D3	R 222	A8	R 423	B2
C 134	D8	D 306	A3	R 224	A8	R 424	B1
C 135	D8	D 307	A3	R 230	E3	R 431	B2
C 136	E7	D 308	A2	R 231	E3	R 432	B2
C 137	E5	D 309	A1	R 232	E3	R 433	B2
C 138	E8	F 101	C7	R 235	D7	R 434	B1
C 139	D7	F 102	B7	R 239	E4	R 435	B1
C 140	D7	F 103	D4	R 242	E2	R 436	B1
C 141	F8	F 104	E4	R 248	E2	R 437	B7
C 142	F8	F 105	C5	R 249	E2	R 438	E6
C 143	E7	F 106	B5	R 251	D2	R 439	F1
C 144	E8	IC 101	B7	R 252	E2	R 440	F1
C 145	E8	IC 102	D6	R 253	D2	R 441	B3
C 146	E5	IC 103	E6	R 254	E2	T 102	A8
C 148	D7	IC 104	E3	R 255	E2	T 103	C8
C 150	E7	IC 300	B2	R 256	F3	T 104	B8
C 151	E7	IC 301	A3	R 257	F2	T 105	C8
C 152	E7	L 101	D8	R 258	D2	T 106	B8
C 153	E8	L 102	F8	R 260	D2	T 107	C9
C 154	D6	L 105	E4	R 264	E3	T 111	C9
C 156	F6	L 106	E4	R 266	E1	T 113	D8
C 157	E3	L 108	E4	R 268	E4	T 114	F8
C 158	F3	R 101	A6	R 276	E1	T 115	D8
C 160	E7	R 102	A6	R 281	E1	T 116	E8
C 161	E5	R 103	A6	R 283	E1	T 117	D7
C 162	E5	R 104	A7	R 293	E1	T 118	E8
C 163	E4	R 105	A6	R 294	E1	T 119	E7
C 164	E4	R 106	A7	R 295	E3	T 120	D1
C 165	D5	R 107	C6	R 298	E1	T 121	E7
C 166	E5	R 108	C6	R 299	F1	T 122	D5
C 168	D4	R 109	B6	R 301	A5	T 123	F6
C 169	E4	R 111	B6	R 302	D4	T 124	F8
C 171	D3	R 112	C7	R 303	C5	T 125	A8
C 175	E3	R 113	B7	R 304	C5	T 126	B8
C 176	E4	R 114	C7	R 305	C4	T 127	A8
C 179	E3	R 115	A7	R 306	C4	T 128	A8
C 182	D4	R 116	C6	R 307	C3	T 130	E2
C 184	E3	R 117	C6	R 308	C4	T 131	E2
C 185	F3	R 118	C7	R 309	C5	T 132	E2
C 186	E4	R 119	B7	R 314	C4	T 133	E2
C 188	E3	R 121	C7	R 315	C4	T 135	F2
C 189	E2	R 122	B7	R 316	D4	T 136	F2
C 191	E4	R 123	C7	R 317	D5	T 139	E1
C 192	F1	R 125	B7	R 318	C3	T 140	D1
C 193	F4	R 127	A8	R 319	C4	T 141	E1
C 195	F4	R 128	C8	R 321	D3	T 301	D4
C 197	E3	R 129	B8	R 323	B4	T 302	C4
C 202	E1	R 131	C8	R 324	C4	T 303	C4
C 226	D8	R 132	B8	R 325	B4	T 304	D4
C 300	A5	R 133	C9	R 326	C4	T 305	C4
C 301	D4	R 134	B9	R 327	B4	T 306	C4
C 303	D4	R 135	C8	R 328	B4	T 307	A5
C 305	C4	R 136	B8	R 329	D5	T 308	C4
C 306	C4	R 137	C9	R 331	B4	T 311	C5
C 307	C4	R 138	C9	R 332	B4	T 313	B4
C 308	C4	R 139	B9	R 333	B4	T 314	B4
C 309	B4	R 140	C8	R 334	B3	T 315	B4
C 311	B4	R 145	B8	R 335	B4	T 316	B4
C 312	B4	R 146	B8	R 336	B3	T 317	D3
C 313	C5	R 147	D6	R 337	B5	T 318	B5
C 314	B4	R 148	D6	R 338	B3	T 319	B3
C 315	C3	R 149	D8	R 339	B5	T 321	D2
C 316	C5	R 151	E8	R 341	B4	T 322	D1
C 317	B4	R 152	D8	R 342	B5	T 323	C2
C 318	C3	R 153	E8	R 343	B3	T 324	C1
C 319	B3	R 154	D8	R 344	D8	T 327	B2
C 320	C2	R 155	E8	R 345	B3	T 328	B1
C 321	C5	R 156	D7	R 346	B5	T 329	A1
C 322	C3	R 157	E7	R 347	B5	T 333	C6
C 323	B4	R 158	D8	R 348	B3	T 334	B6
C 324	B4	R 159	D7	R 349	B3	T 335	C5
C 325	C2	R 161	E8	R 351	B5	T 336	B5
C 326	C1	R 162	E7	R 352	D1	T 337	A5
C 327	C2	R 163	E7	R 353	A4	T 338	B6
		R 164	D8				

CS 33 178

AF PCB

component side

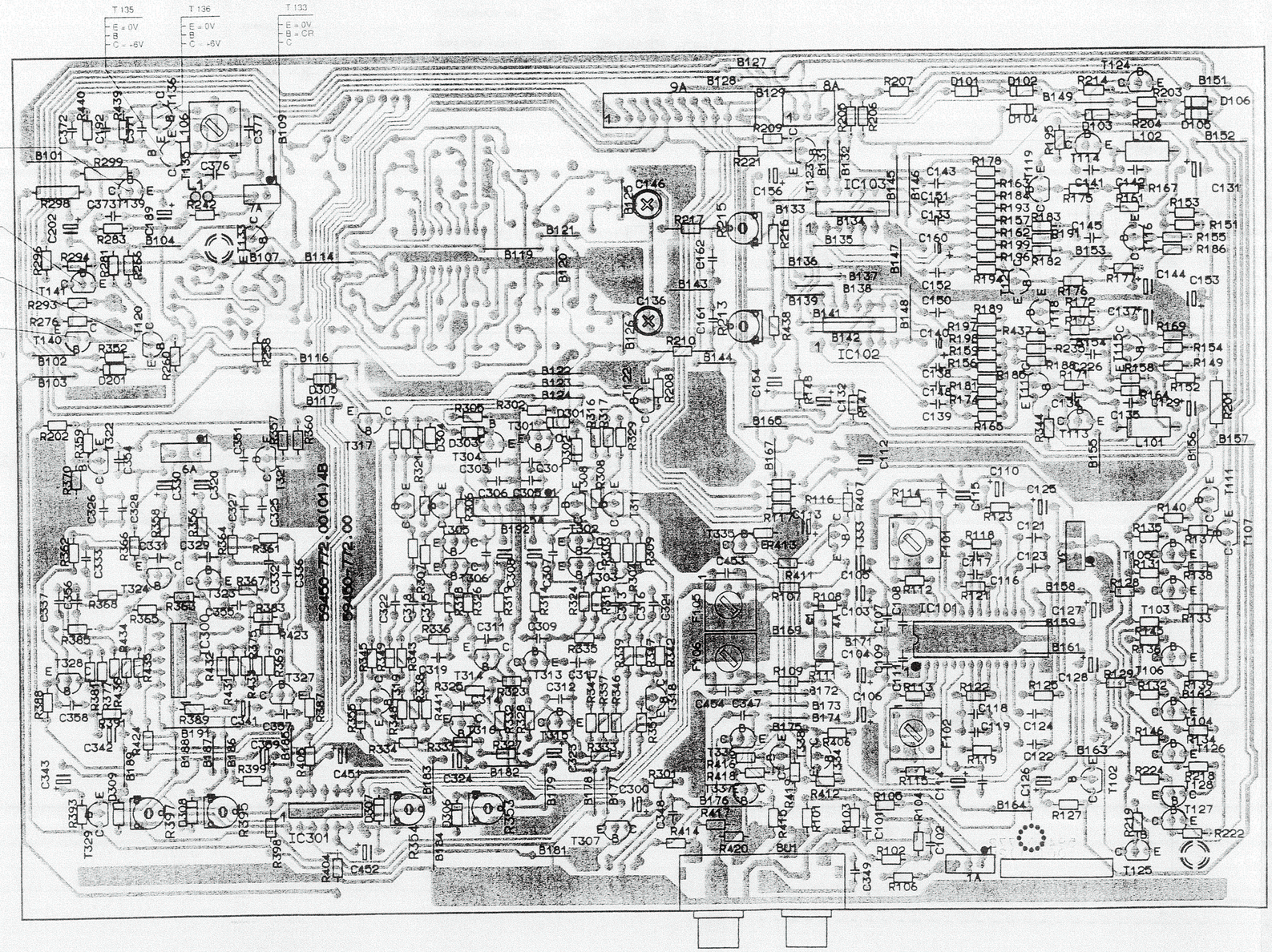

1 A	A 7	C 328	C 1	R 165	D 7	R 354	A 3
2 A	A 5	C 329	C 2	R 167	E 8	R 355	B 3
3 A	C 8	C 330	C 2	R 169	D 8	R 356	C 2
4 A	B 6	C 331	C 1	R 171	D 8	R 357	D 2
5 A	C 4	C 332	C 2	R 172	E 8	R 358	C 2
6 A	D 2	C 333	C 1	R 173	D 8	R 359	D 1
7 A	E 2	C 336	C 2	R 174	D 7	R 360	D 2
8 A	F 6	C 337	C 1	R 175	E 8	R 361	C 2
9 A	F 5	C 341	B 2	R 176	E 8	R 362	C 1
11 A	F 3	C 342	B 1	R 177	E 8	R 363	C 2
BU 1	A 6	C 343	A 1	R 178	F 7	R 364	C 2
D 1	C 8	C 347	B 5	R 181	D 7	R 365	C 1
D 2	B 8	C 348	A 5	R 182	E 8	R 366	C 1
L 1	E 2	C 349	A 6	R 183	E 8	R 367	C 2
P 1	E 1	C 351	D 2	R 184	E 7	R 368	C 1
P 2	E 1	C 352	D 1	R 185	D 7	R 369	B 2
C 101	A 6	C 353	D 2	R 186	E 8	R 370	D 1
C 102	A 7	C 354	D 1	R 188	D 7	R 375	B 2
C 103	C 6	C 355	C 2	R 189	E 7	R 377	B 1
C 104	B 6	C 356	C 1	R 191	E 8	R 381	B 1
C 105	C 6	C 357	B 2	R 193	E 7	R 383	C 2
C 106	B 6	C 358	B 1	R 194	E 7	R 385	B 1
C 107	C 6	C 359	B 2	R 195	F 8	R 387	B 2
C 108	B 7	C 371	F 1	R 196	E 7	R 388	B 1
C 109	B 6	C 372	F 1	R 197	D 7	R 389	B 2
C 110	C 7	C 373	E 1	R 198	D 7	R 391	B 1
C 111	B 7	C 374	D 4	R 199	E 7	R 393	A 1
C 112	D 6	C 375	F 4	R 201	D 8	R 395	A 2
C 113	C 6	C 376	F 2	R 202	D 1	R 397	A 1
C 114	A 7	C 377	F 2	R 203	F 8	R 398	A 2
C 115	C 7	C 451	B 3	R 204	F 8	R 399	A 2
C 116	C 7	C 452	A 3	R 205	F 6	R 404	A 3
C 117	C 7	C 453	C 5	R 206	F 6	R 405	B 2
C 118	B 7	C 454	B 5	R 207	F 7	R 406	B 6
C 119	B 7	D 101	F 7	R 208	D 5	R 407	C 6
C 121	C 7	D 102	F 7	R 209	F 6	R 411	C 6
C 122	B 7	D 103	F 8	R 210	D 5	R 412	A 6
C 123	C 7	D 104	F 7	R 213	E 5	R 413	C 6
C 124	B 7	D 105	F 9	R 214	F 8	R 414	A 5
C 125	C 7	D 106	F 9	R 215	E 5	R 415	A 6
C 126	A 7	D 201	D 1	R 216	E 6	R 416	B 5
C 127	C 8	D 301	D 4	R 217	E 5	R 417	A 5
C 128	B 8	D 302	D 4	R 218	A 9	R 418	A 5
C 129	D 8	D 303	D 4	R 219	A 8	R 419	A 6
C 131	F 9	D 304	D 3	R 221	F 6	R 420	A 5
C 132	D 6	D 305	D 3	R 222	A 9	R 423	B 2
C 134	D 8	D 306	A 3	R 224	A 8	R 424	B 1
C 135	D 8	D 307	A 3	R 230	E 3	R 431	B 2
C 136	E 7	D 308	A 2	R 231	E 3	R 432	B 2
C 137	E 8	F 101	C 7	R 232	E 3	R 433	B 2
C 138	D 7	F 102	B 7	R 235	D 7	R 434	B 1
C 139	D 7	F 103	D 4	R 239	E 4	R 435	B 1
C 140	D 7	F 104	E 4	R 242	E 2	R 436	B 1
C 141	F 8	F 105	C 5	R 248	E 2	R 437	D 7
C 142	F 8	F 106	B 5	R 249	E 2	R 438	E 6
C 143	E 7	IC 101	B 7	R 251	D 2	R 439	F 1
C 144	E 8	IC 102	D 6	R 252	E 2	R 440	F 1
C 145	E 8	IC 103	E 6	R 253	D 2	R 441	B 3
C 146	E 5	IC 104	E 3	R 254	E 2	T 102	A 8
C 148	D 7	IC 300	B 2	R 255	E 2	T 103	C 8
C 150	E 7	IC 301	A 3	R 256	F 3	T 104	B 8
C 151	E 7	L 101	D 8	R 257	E 2	T 105	C 8
C 152	E 7	L 102	F 8	R 258	D 2	T 106	B 8
C 153	E 8	L 105	E 4	R 260	D 2	T 107	C 9
C 154	D 6	L 106	F 2	R 264	E 3	T 111	C 9
C 156	F 6	L 108	E 4	R 266	E 1	T 113	D 8
C 157	E 3	R 101	A 6	R 268	E 4	T 114	F 8
C 158	F 3	R 102	A 6	R 276	E 1	T 115	D 8
C 160	E 7	R 103	A 6	R 281	E 1	T 116	E 9
C 161	E 5	R 104	A 7	R 283	E 1	T 117	D 7
C 162	E 5	R 105	A 6	R 293	E 1	T 118	E 8
C 163	E 4	R 106	A 7	R 294	E 1	T 119	E 7
C 164	E 4	R 107	C 6	R 296	E 1	T 120	D 1
C 165	D 5	R 108	C 6	R 297	E 3	T 121	E 7
C 166	E 5	R 109	B 6	R 298	E 1	T 122	D 5
C 168	D 4	R 111	B 6	R 299	F 1	T 123	F 6
C 169	E 4	R 112	C 7	R 301	A 5	T 124	F 8
C 171	D 3	R 113	B 7	R 302	D 4	T 125	A 8
C 175	E 3	R 114	C 7	R 303	C 5	T 126	B 8
C 176	E 4	R 115	A 7	R 304	C 5	T 127	A 8
C 179	E 3	R 116	C 6	R 305	D 4	T 128	A 8
C 182	D 4	R 117	C 6	R 306	C 4	T 130	E 2
C 184	E 3	R 118	C 7	R 307	C 3	T 131	E 2
C 185	F 3	R 119	C 7	R 308	C 4	T 132	E 2
C 186	E 3	R 121	C 7	R 309	C 5	T 133	E 2
C 188	E 3	R 122	B 7	R 314	C 4	T 135	F 2
C 189	E 2	R 123	C 7	R 315	C 4	T 136	F 2
C 191	E 4	R 125	B 7	R 316	D 4	T 139	E 1
C 192	F 1	R 127	A 8	R 317	D 5	T 140	D 1
C 193	F 4	R 128	C 8	R 318	C 3	T 141	E 1
C 195	F 4	R 129	B 8	R 319	C 4	T 301	D 4
C 197	E 3	R 131	C 8	R 321	D 3	T 302	C 4
C 202	E 1	R 132	B 8	R 323	D 4	T 303	C 4
C 226	D 8	R 133	C 9	R 324	C 4	T 304	D 4
C 300	A 5	R 134	B 9	R 325	B 4	T 305	C 4
C 301	D 4	R 135	C 8	R 326	C 4	T 306	C 4
C 303	D 4	R 136	B 8	R 327	B 4	T 307	A 5
C 305	C 4	R 137	C 9	R 328	B 4	T 308	C 4
C 306	C 4	R 138	C 9	R 329	D 5	T 311	C 5
C 307	C 4	R 139	B 9	R 331	B 4	T 313	B 4
C 308	C 4	R 140	C 8	R 332	B 4	T 314	B 4
C 309	B 4	R 145	B 8	R 333	B 4	T 315	B 4
C 311	B 4	R 146	B 8	R 334	B 3	T 316	B 4
C 312	B 4	R 147	D 6	R 335	B 4	T 317	D 3
C 313	C 5	R 148	D 6	R 336	B 3	T 318	B 5
C 314	B 4	R 149	D 8	R 337	B 5	T 319	B 3
C 315	C 3	R 151	E 8	R 338	B 3	T 321	D 1
C 316	C 5	R 152	D 8	R 339	B 5	T 322	D 1
C 317	B 4	R 153	E 8	R 341	B 4	T 323	C 2
C 318	C 3	R 154	D 8	R 342	B 5	T 324	C 1
C 319	B 3	R 155	E 8	R 343	B 3	T 327	B 2
C 320	C 2	R 156	D 7	R 344	D 8	T 328	B 1
C 321	C 5	R 157	E 7	R 345	B 3	T 329	A 1
C 322	C 3	R 158	D 8	R 346	B 5	T 333	C 6
C 323	B 4	R 159	D 7	R 347	B 5	T 334	B 5
C 324	B 4	R 161	E 8	R 348	B 3	T 335	C 5
C 325	C 2	R 162	E 7	R 349	B 3	T 336	B 5
C 326	C 1	R 163	E 7	R 351	B 5	T 337	A 5
C 327	C 2	R 164	D 8	R 352	D 1	T 338	B 6
				R 353	A 4		

CIRCUIT DIAGRAM AF BOARD - PART 3

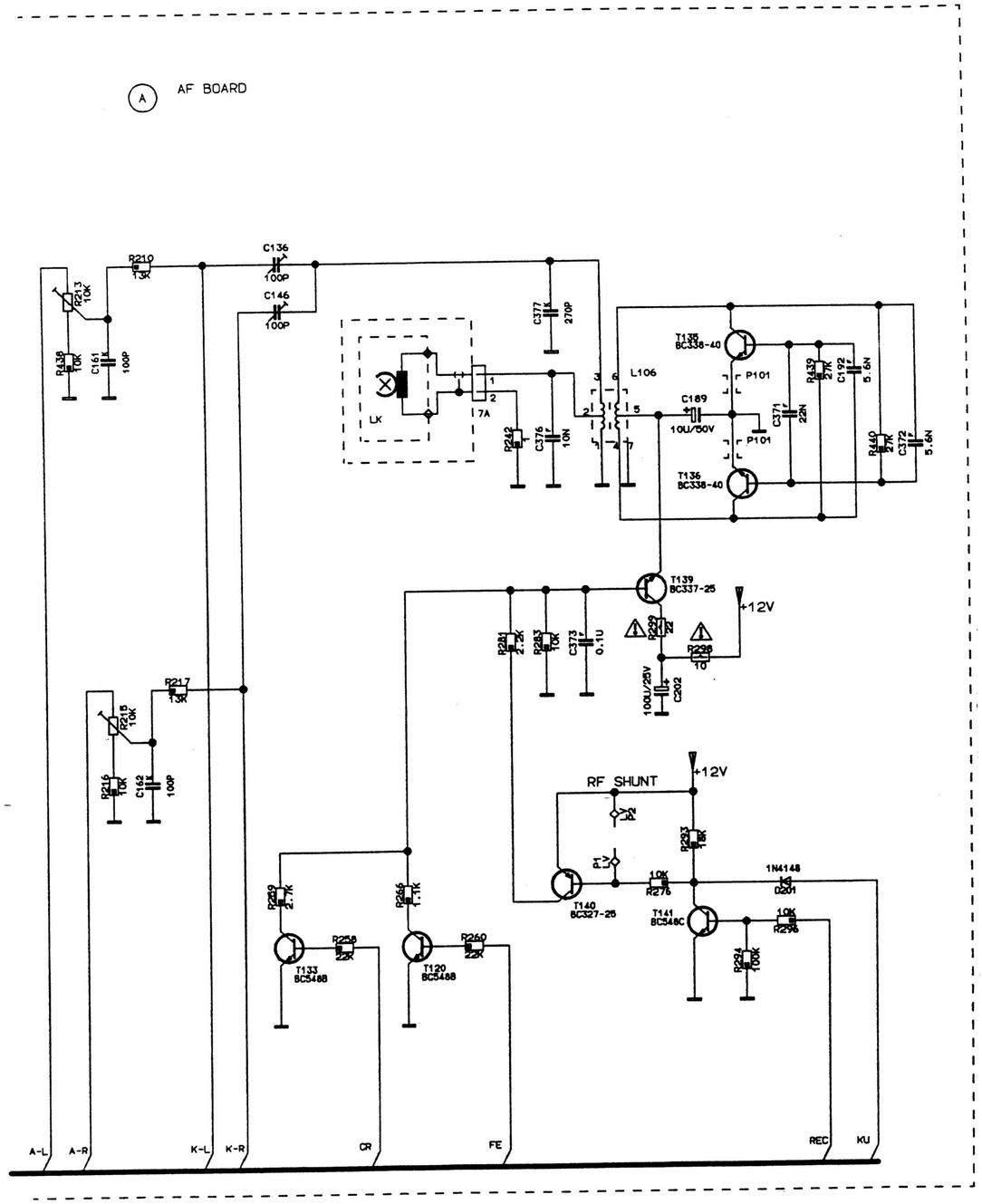

RESISTOR

- CR16/0.2W (KSW 0204 DIN)
- CR37/0.5W (KSW 0411 DIN)
- SFR16T/0.33W (MSW 0204 DIN)
- CR25/0.33W (KSW 0207 DIN)
- CR52/0.67W (KSW 0617 DIN)
- SFR25H/0.6W (MSW 0207 DIN)
- METAL OXIDE
- LOW FLAMMABILITY
- SAFETY RESISTOR

CAPACITOR

- ELECTROLYTIC
- TANTALUM ELECTROLYTIC
- FOIL
- CERAMIC
- MULTILAYER
- POLYPROPYLEN (KS-KP)

TOP VIEW

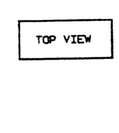

BC548
BC558
BC550
BC338
BC327
BC557

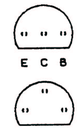

BC636

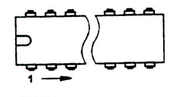

CD4066
CXA1330S
X24C00P
BA6251

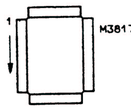

M38172M4089FP

FRONT VIEW

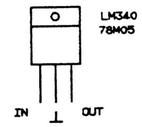

MEASUREMENT POINT

ALIGNMENT POINT

ATTENTION!
OBSERVE MOS COMPONENTS HANDLING INSTRUCTIONS WHEN SERVICING!

⚠ ABSOLUTELY NECESSARY FOR THE SAFETY OF THE SET. THESE COMPONENTS MEET THE SAFETY REQUIREMENTS ACCORDING TO VDE OR IEC. RESP. AND MUST BE REPLACED BY PARTS OF SAME SPECIFICATION ONLY.

IF NOT OTHERWISE INDICATED ALL VOLTAGES ARE MEASURED AGAINST CHASSIS WITH A VOLTMETER (RI=10M).

FC911

CIRCUIT DIAGRAM: MAINS SWITCH BOARD, POWER SUPPLY BOARD, RC BUS BOARD, DRIVE MECHANISM CRD 467 AND CRD 468

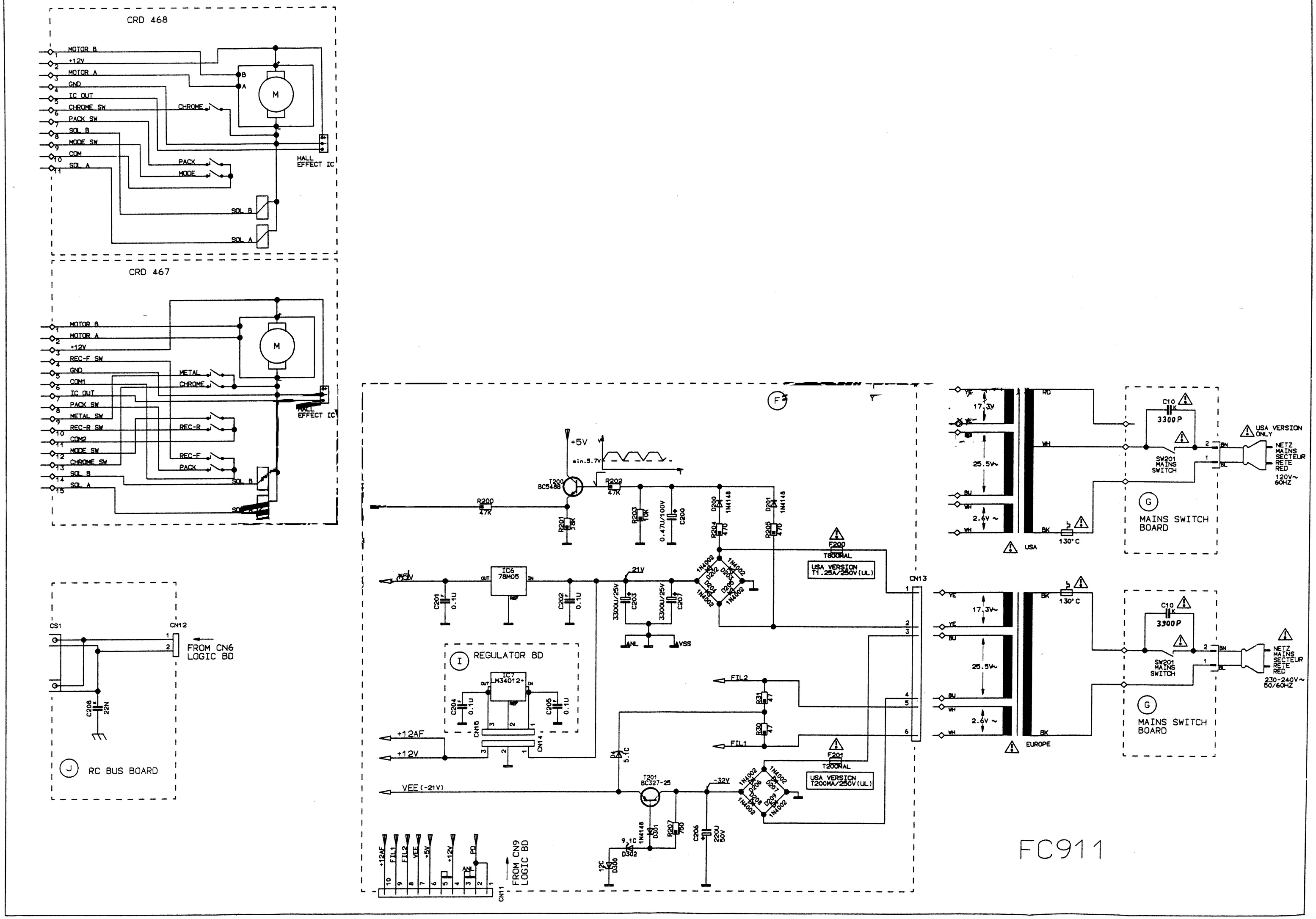

MAINS SWITCH PCB, POWER SUPPLY PCB, RC BUS PCB, DRIVE MECHANISM CRD 467 PCB AND CRD 468 PCB

RC BUS BOARD
(component side)

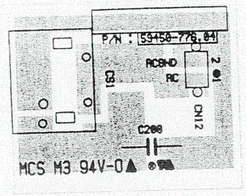

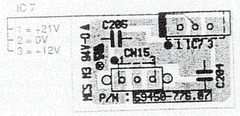

REGULATOR BOARD
(component side)

POWER SUPPLY BOARD
(component side)

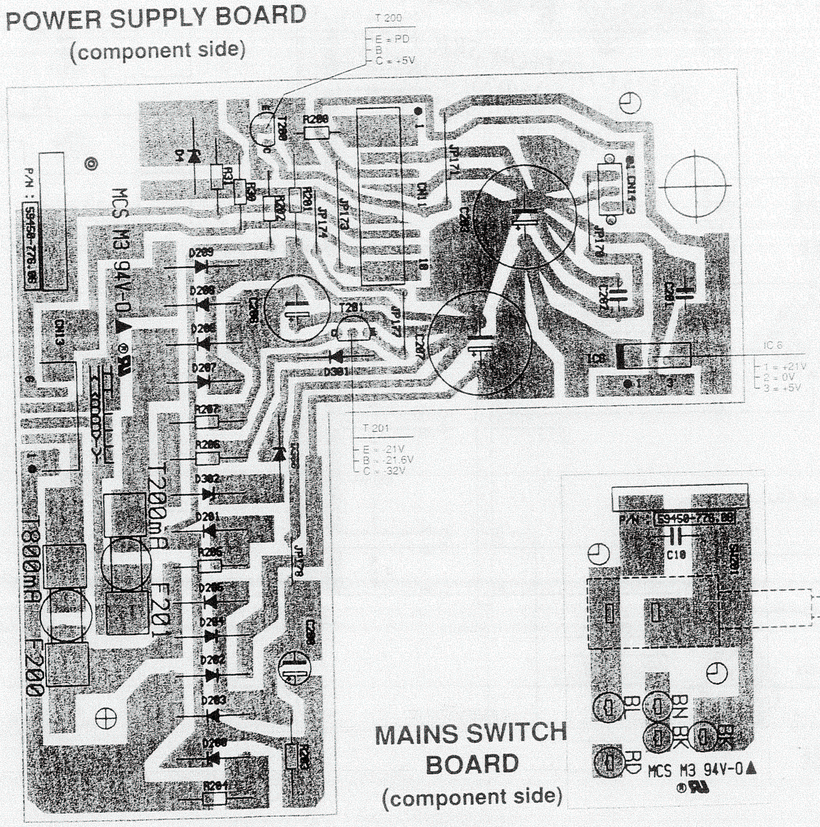

DISPLAY PCB, KEYBOARD PCB, LOGIC PCB

DISPLAY BOARD
(component side)

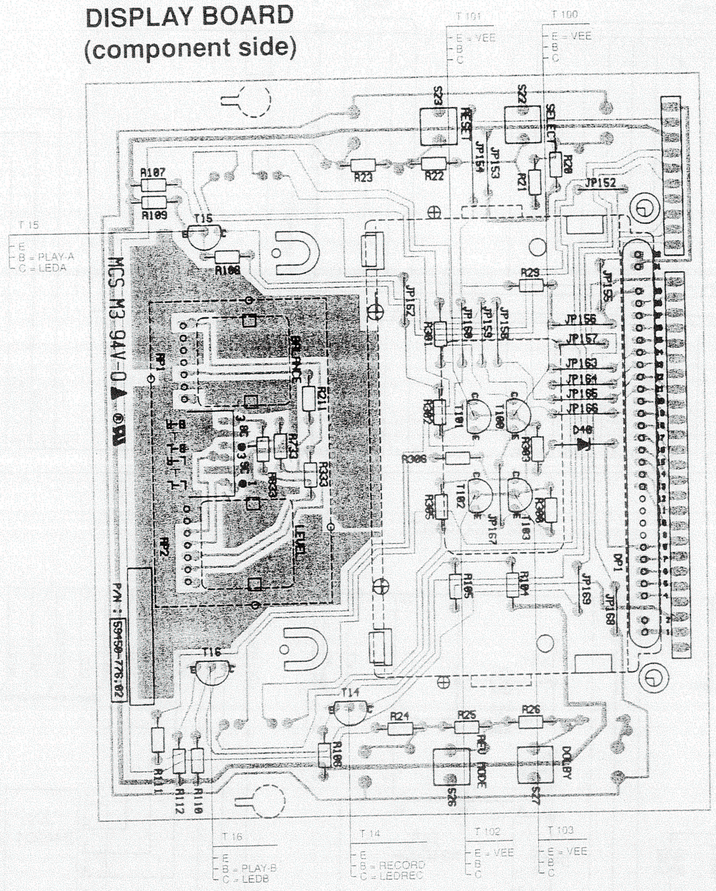

KEYBOARD
(component side)

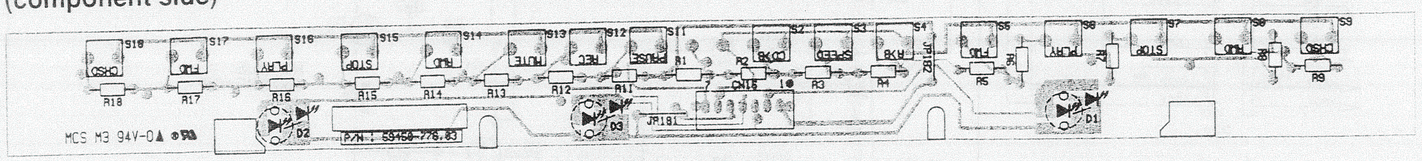

LOGIC BOARD
(component side)

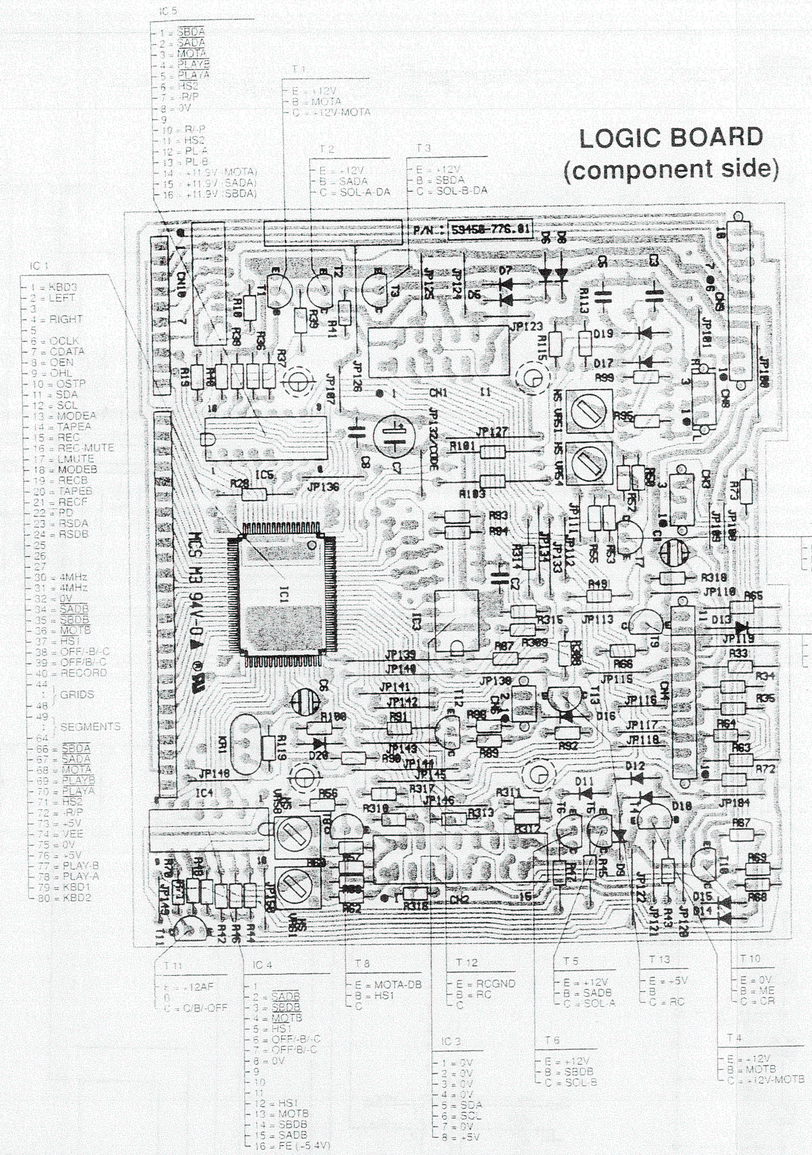

8 C	E 1	R 27	C 3	R 211	E 2		
9 C	D 1	R 28	E 6	R 300	D 3		
CN 1	F 7	R 29	E 3	R 301	E 2		
CN 2	C 7	R 32	E 7	R 302	E 2		
CN 3	E 9	R 33	D 9	R 303	D 3		
CN 4	D 9	R 34	D 9	R 304	E 7		
CN 6	D 8	R 35	D 9	R 305	D 2		
CN 7	E 7	R 36	F 6	R 306	D 2		
CN 8	E 9	R 37	F 6	R 307	E 7		
CN 9	F 9	R 38	F 6	R 308	D 8		
CN 10	F 6	R 39	F 6	R 309	D 8		
CN 16	A 5	R 40	F 6	R 310	C 7		
C 1	E 8	R 41	F 7	R 311	C 8		
C 2	D 8	R 42	C 6	R 312	C 8		
C 3	F 8	R 43	C 8	R 313	C 7		
C 4	F 8	R 44	C 6	R 314	E 8		
C 5	F 8	R 45	C 8	R 315	D 8		
C 6	D 6	R 46	C 6	R 316	C 7		
C 7	E 7	R 47	C 8	R 317	C 7		
C 8	E 7	R 48	C 6	R 318	D 8		
D 1	A 6	R 49	D 8	R 333	D 2		
D 2	A 2	R 50	E 8	R 733	D 1		
D 3	A 4	R 52	E 8	R 833	D 1		
D 5	F 8	R 53	E 8	RP 1	E 1		
D 6	F 8	R 55	E 8	RP 2	D 1		
D 7	F 8	R 56	C 7	VR 51	E 8		
D 8	F 8	R 57	C 7	VR 54	E 8		
D 9	C 8	R 58	C 7	VR 58	C 6		
D 10	C 8	R 60	C 7	VR 61	C 6		
D 11	C 8	R 62	C 7	S 1	A 4		
D 12	C 8	R 63	C 9	S 2	A 5		
D 13	D 9	R 64	D 9	S 3	A 5		
D 14	C 9	R 65	D 9	S 4	A 5		
D 15	C 9	R 66	D 8	S 5	A 6		
D 16	D 8	R 67	C 9	S 6	A 6		
D 17	F 8	R 68	C 9	S 7	A 7		
D 18	F 8	R 69	C 9	S 8	A 7		
D 19	F 8	R 70	C 6	S 9	A 8		
D 20	D 7	R 71	C 6	S 11	A 4		
D 24	F 1	R 72	C 9	S 12	A 4		
D 25	F 1	R 73	E 9	S 13	A 3		
D 26	C 1	R 74	E 7	S 14	A 3		
D 27	C 1	R 75	D 7	S 15	A 2		
D 40	D 3	R 76	E 7	S 16	A 2		
DP 1	D 3	R 87	D 8	S 17	A 1		
IC 1	D 6	R 88	D 7	S 18	A 1		
IC 3	D 7	R 89	D 7	S 21	F 3		
IC 4	C 6	R 90	C 7	S 22	F 3		
IC 5	E 6	R 91	D 7	S 23	F 2		
KR 1	D 6	R 92	D 8	S 24	F 2		
R 1	A 4	R 93	E 7	S 25	C 2		
R 2	A 5	R 94	E 7	S 26	C 2		
R 3	A 5	R 95	E 8	S 27	C 3		
R 4	A 5	R 96	E 8	S 28	C 3		
R 5	A 6	R 97	E 8	T 1	F 6		
R 6	A 6	R 98	E 8	T 2	F 7		
R 7	A 7	R 99	F 8	T 3	F 7		
R 8	A 7	R 100	D 7	T 4	C 8		
R 9	A 8	R 101	E 8	T 5	C 8		
R 10	F 6	R 102	E 8	T 6	C 8		
R 11	A 4	R 103	E 8	T 7	E 8		
R 12	A 3	R 105	D 2	T 8	C 7		
R 13	A 3	R 106	C 2	T 9	D 8		
R 14	A 3	R 107	F 1	T 10	C 9		
R 15	A 2	R 108	F 1	T 11	C 6		
R 16	A 2	R 109	F 1	T 12	D 7		
R 17	A 1	R 110	C 1	T 13	D 8		
R 18	A 1	R 111	C 1	T 14	C 2		
R 19	F 6	R 112	C 1	T 15	F 1		
R 20	F 3	R 112	E 8	T 16	C 1		
R 21	F 3	R 113	F 8	T 100	E 3		
R 22	F 2	R 114	F 8	T 101	E 3		
R 23	F 2	R 115	F 8	T 102	D 3		
R 24	C 2	R 119	D 6	T 103	D 3		
R 25	C 2	R 133	E 8				
R 26	C 3	R 134	E 8				

CIRCUIT DIAGRAM: DISPLAY BOARD, KEYBOARD, LOGIC BOARD

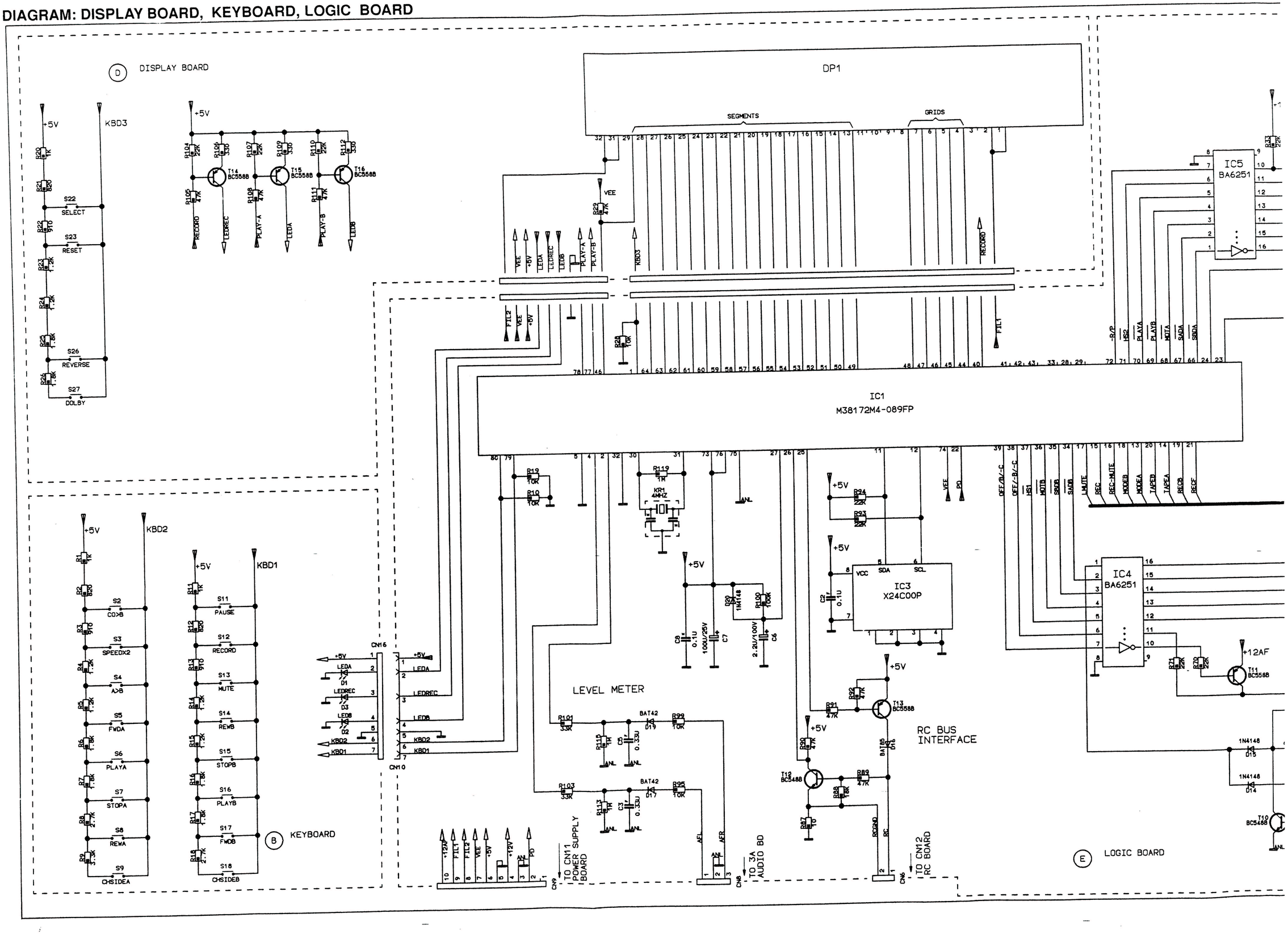

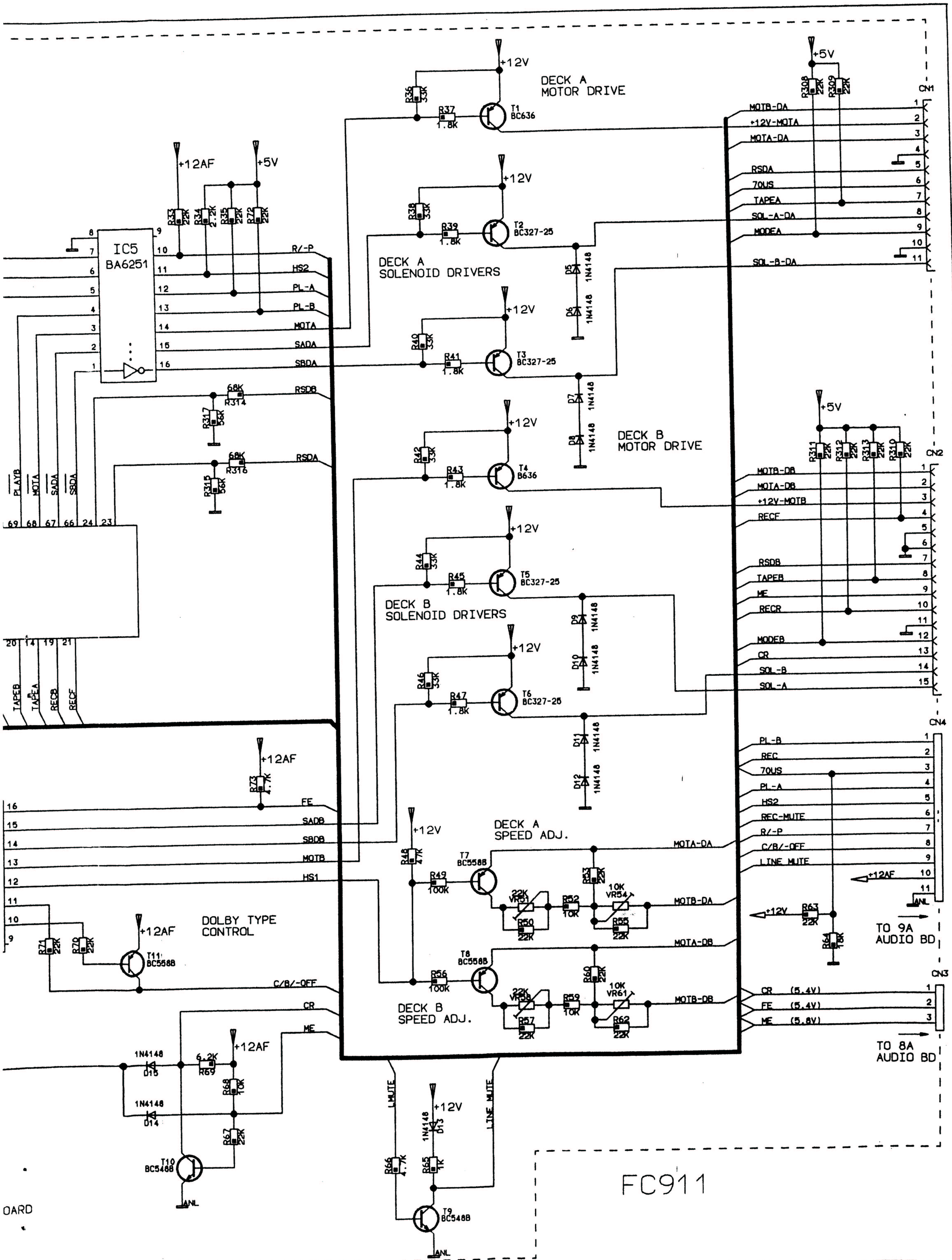
+12V
DECK A
MOTOR DRIVE
+5V
CN1
R36 33K
R37 1.8K
T1 BC636
R308 22K
R309 22K
MOTB-DA
+12V-MOTA
MOTA-DA
RSDA
70US
TAPEA
SOL-A-DA
MODEA
SOL-B-DA
+12AF
+5V
R33 22K
R34 2.2K
R35 22K
R72 22K
IC5
BA6251
R/-P
HS2
PL-A
PL-B
MOTA
SADA
SBDA
RSDB
RSDA
68K
R314
R317 56K
R316
R315 56K
PLAYB
MOTA
SADA
SBDA
69 68 67 66 24 23
IAPEB
TAPEA
RECB
RECF
20 14 19 21
+12V
DECK A
SOLENOID DRIVERS
R38 33K
R39 1.8K
T2 BC327-25
D5 1N4148
D6 1N4148
R40 33K
R41 1.8K
T3 BC327-25
D7 1N4148
D8 1N4148
+12V
DECK B
MOTOR DRIVE
R42 33K
R43 1.8K
T4 B636
+5V
R311 22K
R312 22K
R313 22K
R310 22K
CN2
MOTB-DB
MOTA-DB
+12V-MOTB
RECF
RSDB
TAPEB
ME
RECR
MODEB
CR
SOL-B
SOL-A
+12V
R44 33K
R45 1.8K
T5 BC327-25
D9 1N4148
D10 1N4148
DECK B
SOLENOID DRIVERS
+12V
R46 33K
R47 1.8K
T6 BC327-25
D11 1N4148
D12 1N4148
CN4
PL-B
REC
70US
PL-A
HS2
REC-MUTE
R/-P
C/B/-OFF
LINE MUTE
+12AF
ANL
TO 9A
AUDIO BD
+12AF
R73 4.7K
FE
SADB
SBDB
MOTB
HS1
C/B/-OFF
CR
ME
+12V
DECK A
SPEED ADJ.
R48 47K
T7 BC558B
R49 100K
22K VR51
R50 22K
R52 10K
R53 22K
10K VR54
R55 22K
MOTA-DA
MOTB-DA
MOTA-DB
T8 BC558B
R56 100K
22K VR58
R57 22K
R59 10K
R60 22K
10K VR61
R62 22K
MOTB-DB
DECK B
SPEED ADJ.
+12V
R63 22K
R64 18K
CN3
CR (5.4V)
FE (5.4V)
ME (5.8V)
TO 8A
AUDIO BD
DOLBY TYPE
CONTROL
+12AF
R71 22K
R70 22K
T11 BC558B
1N4148
D15
6.2K
R69
R68 10K
1N4148
D14
R67 22K
T10 BC548B
ANL
LMUTE
LINE MUTE
+12V
1N4148
D13
R66 4.7K
R65 1K
T9 BC548B
ANL
OARD
FC911

WIRING DIAGRAM

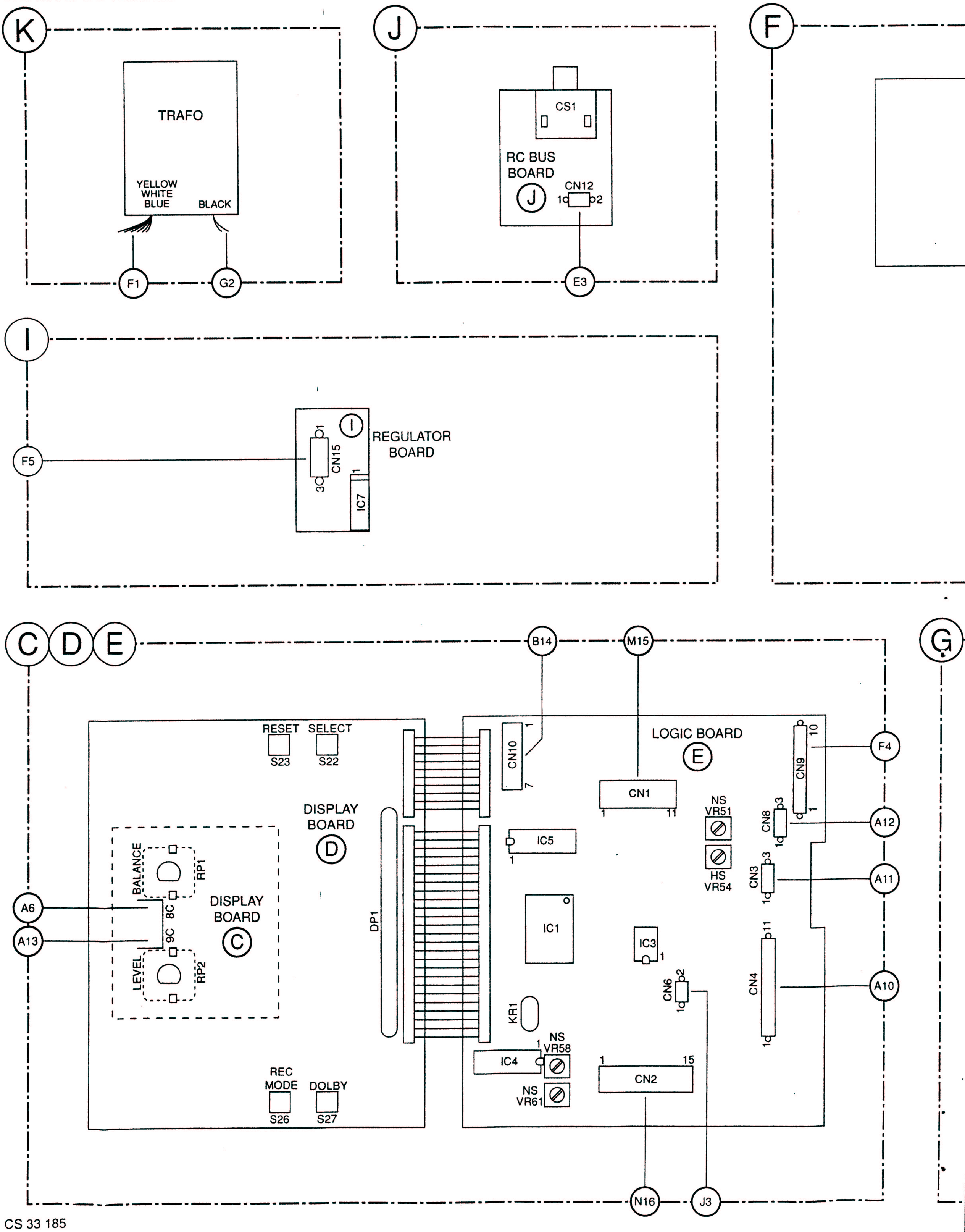

CS 33 185

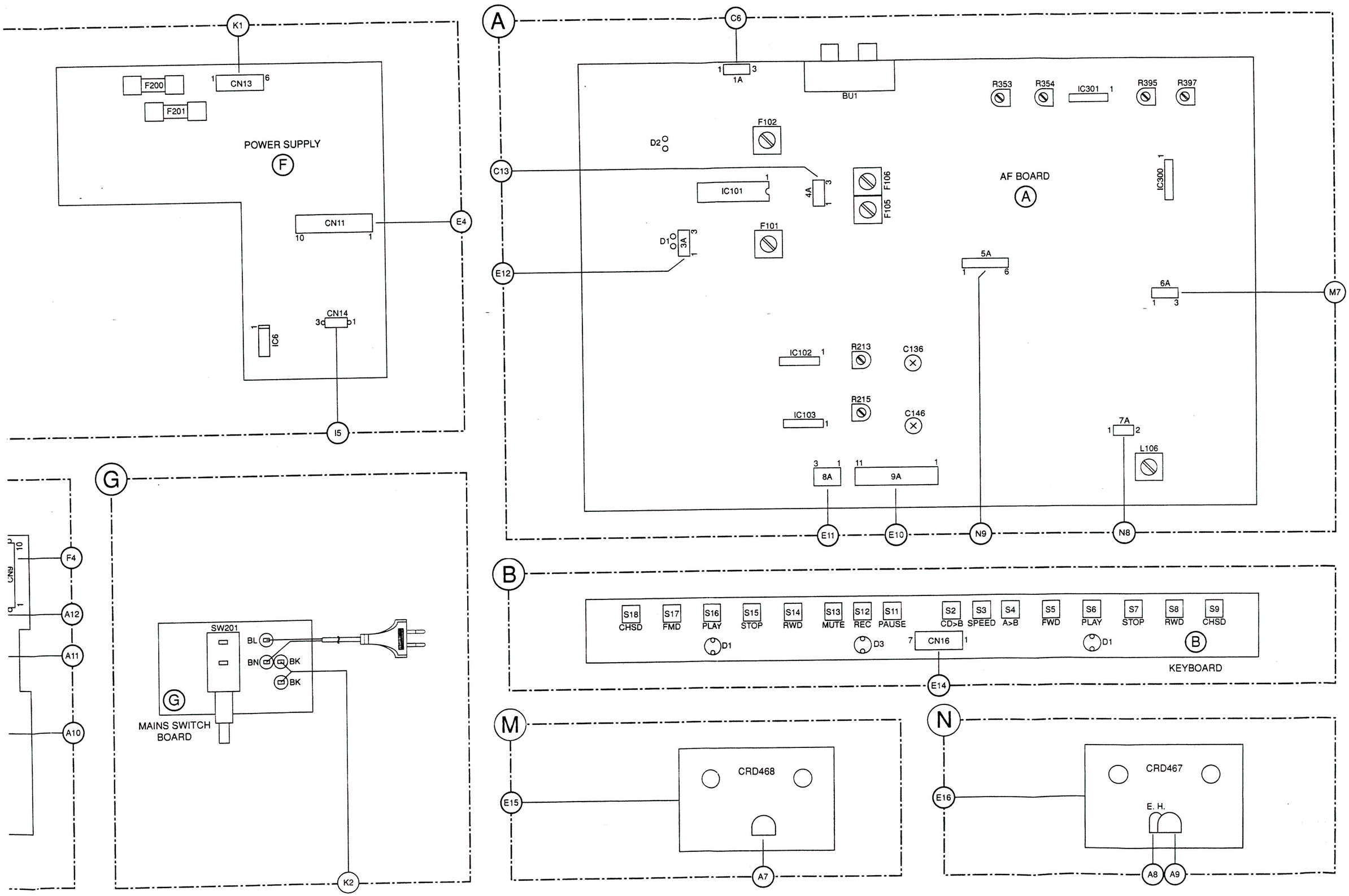
K1
F200
CN13
1
6
F201
POWER SUPPLY
F
CN11
10
1
E4
CN14
3
1
IC6
I5
A
C6
1
3
1A
BU1
R353
R354
IC301
1
R395
R397
F102
D2
C13
IC101
1
4A
3
1
F106
F105
AF BOARD
A
IC300
1
D1
3A
F101
E12
5A
1
6
6A
1
3
M7
IC102
1
R213
C136
R215
IC103
1
C146
7A
1
2
L106
3
1
8A
11
1
9A
E11
E10
N9
N8
G
F4
A12
A11
A10
SW201
BL
BN
BK
BK
G
MAINS SWITCH
BOARD
K2
B
S18
CHSD
S17
FMD
S16
PLAY
S15
STOP
S14
RWD
S13
MUTE
S12
REC
S11
PAUSE
S2
CD>B
S3
SPEED
S4
A>B
S5
FWD
S6
PLAY
S7
STOP
S8
RWD
S9
CHSD
D1
D3
7
CN16
1
D1
B
KEYBOARD
E14
M
CRD468
E15
A7
N
CRD467
E. H.
E16
A8
A9

EXPLODED VIEW: LIST OF MECHANICAL PARTS DRIVE MECHANISM A (CRD 468)

101 4822 249 10466	127 4822 403 53784	149 4822 403 53782
102 4822 502 13322	128 4822 492 33062	152 4822 528 70803
103 4822 502 13323	129 4822 403 70669	153 4822 403 53777
106 4822 466 82935	131 4822 278 90613	154 4822 492 33056
107 4822 492 70258	132 4822 209 60879	156 4822 492 33058
108 4822 502 13326	133 4822 492 42409	157 4822 278 90609
111 4822 464 50766	136 4822 403 53781	158 4822 492 70257
113 4822 492 71135	137 4822 528 70801	159 4822 492 33055
114 4822 466 82937	138 4822 403 70668	161 4822 522 32734
116 4822 466 92356	139 4822 528 10744	163 4822 403 70664
118 4822 466 82936	141 4822 528 10743	165 4822 528 20664
119 4822 522 32738	142 4822 492 52101	166 4822 403 70667
121 4822 502 13325	143 4822 462 71853	168 4822 403 70665
122 4822 403 53783	144 4822 492 33057	169 4822 492 71134
123 4822 466 61823	146 4822 530 80529	171 4822 528 70802
124 4822 403 53786	147 4822 492 42406	172 4822 492 33053
126 4822 502 13321	148 4822 403 70666	173 4822 256 91937

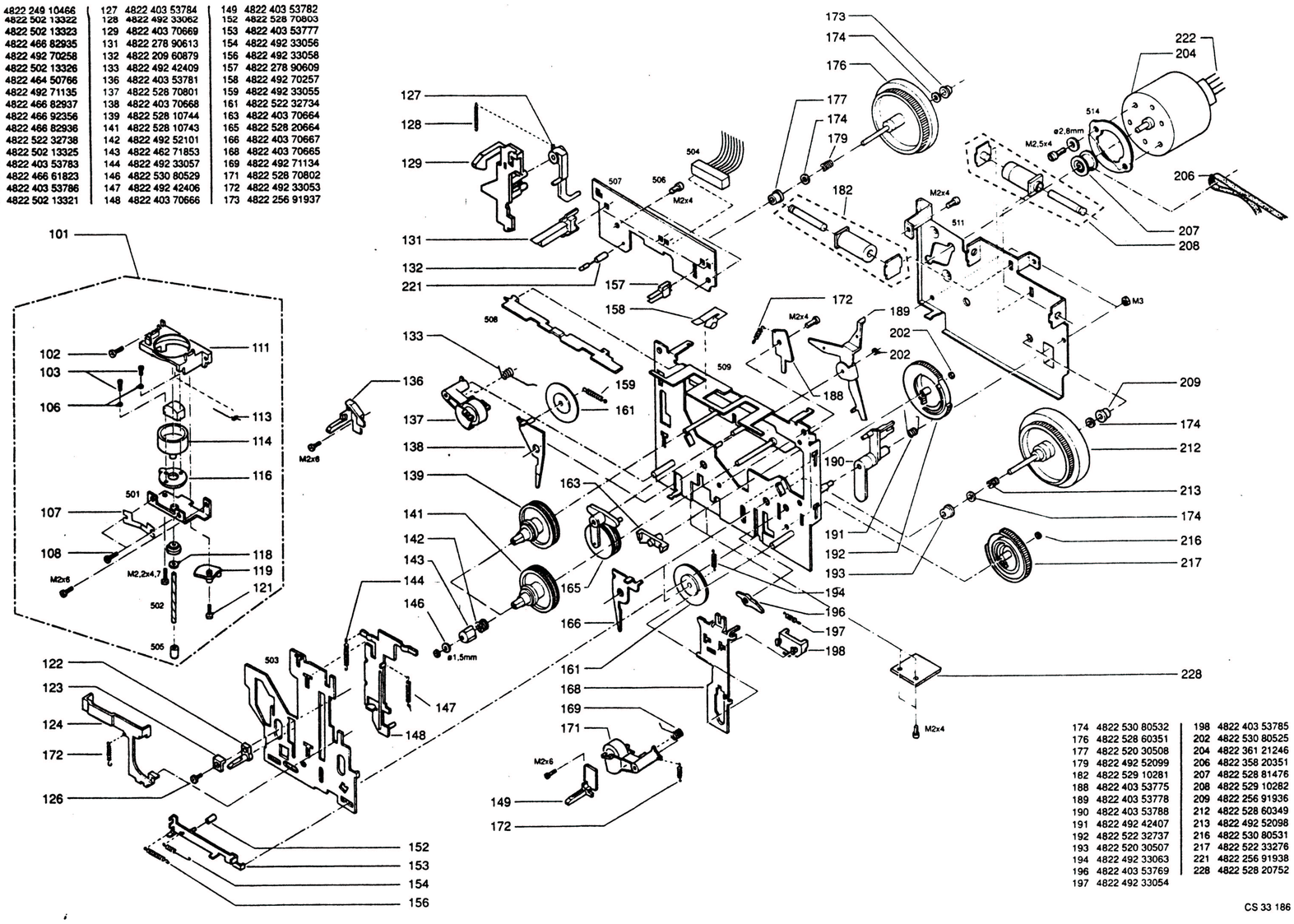

174 4822 530 80532	198 4822 403 53785	
176 4822 528 60351	202 4822 530 80525	
177 4822 520 30508	204 4822 361 21246	
179 4822 492 52099	206 4822 358 20351	
182 4822 529 10281	207 4822 528 81476	
188 4822 403 53775	208 4822 529 10282	
189 4822 403 53778	209 4822 256 91936	
190 4822 403 53788	212 4822 528 60349	
191 4822 492 42407	213 4822 492 52098	
192 4822 522 32737	216 4822 530 80531	
193 4822 520 30507	217 4822 522 33276	
194 4822 492 33063	221 4822 256 91938	
196 4822 403 53769	228 4822 528 20752	
197 4822 492 33054		

CS 33 186

EXPLODED VIEW: LIST OF MECHANICAL PARTS DRIVE MECHANISM B (CRD 467)

101 4822 249 10467	126 4822 502 13321	148 4822 403 70666
102 4822 502 13322	127 4822 403 53784	149 4822 403 53782
103 4822 502 13323	128 4822 492 33062	152 4822 528 70803
106 4822 466 82935	129 4822 403 30784	153 4822 403 53777
107 4822 492 70258	131 4822 278 90613	154 4822 492 33056
108 4822 502 13326	132 4822 209 60879	156 4822 492 33058
111 4822 464 50766	133 4822 492 42409	157 4822 278 90609
113 4822 492 71135	136 4822 403 53781	158 4822 492 70257
114 4822 466 82934	137 4822 528 70801	159 4822 492 33055
116 4822 466 92356	138 4822 403 70668	161 4822 522 32734
118 4822 466 82936	139 4822 528 10744	163 4822 403 70664
119 4822 522 32738	141 4822 528 10743	165 4822 528 20664
121 4822 502 13325	142 4822 492 52101	166 4822 403 70667
122 4822 403 53783	143 4822 462 71853	168 4822 403 70665
123 4822 466 61823	144 4822 492 33057	169 4822 492 71134
124 4822 403 53786	146 4822 530 80529	171 4822 528 70802
125 4822 492 33053	147 4822 492 42406	172 4822 492 33342

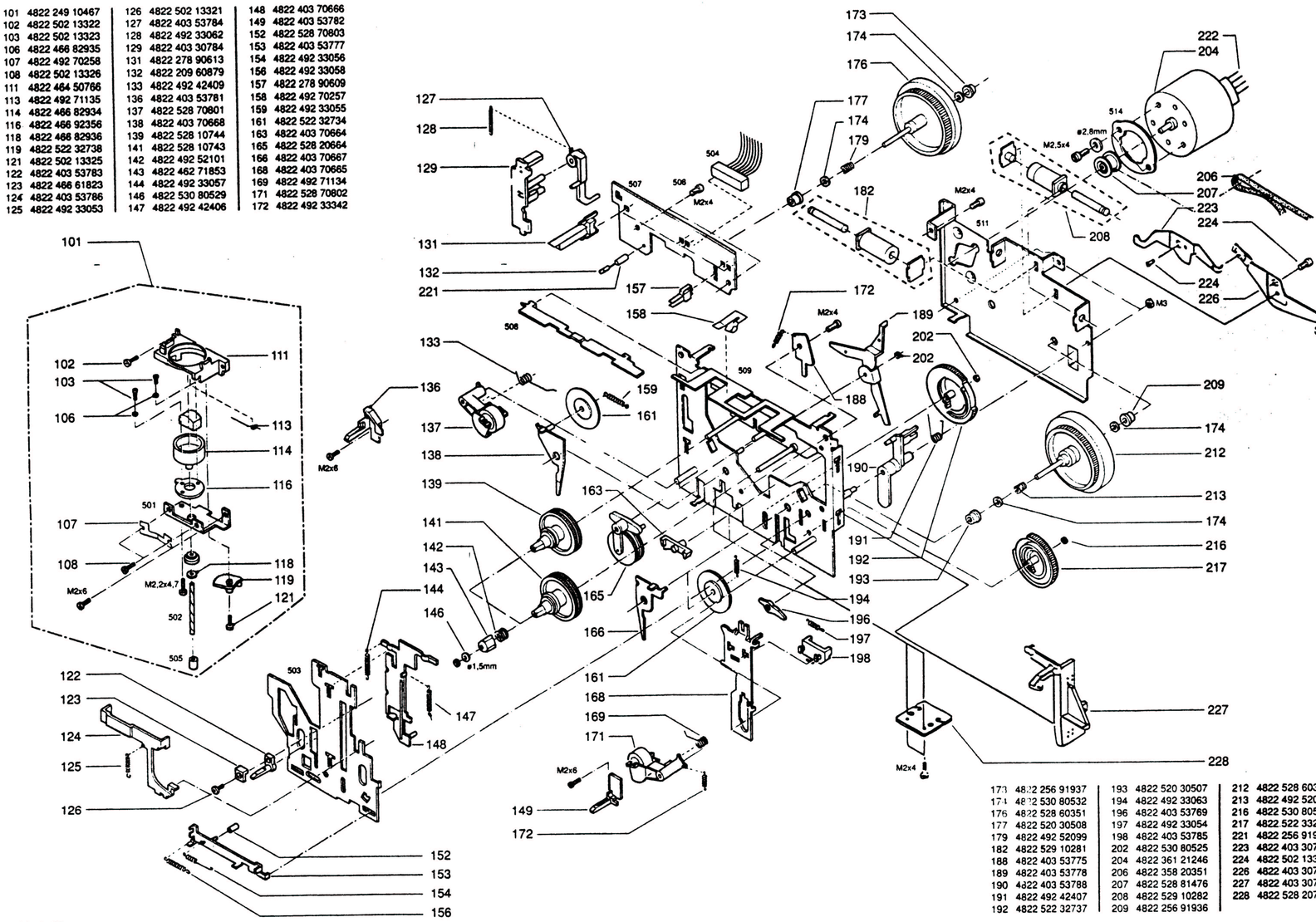

173 4822 256 91937	193 4822 520 30507	212 4822 528 60349
174 4822 530 80532	194 4822 492 33063	213 4822 492 52098
176 4822 528 60351	196 4822 403 53769	216 4822 530 80531
177 4822 520 30508	197 4822 492 33054	217 4822 522 33276
179 4822 492 52099	198 4822 403 53785	221 4822 256 91938
182 4822 529 10281	202 4822 530 80525	223 4822 403 30782
188 4822 403 53775	204 4822 361 21246	224 4822 502 13324
189 4822 403 53778	206 4822 358 20351	226 4822 403 30783
190 4822 403 53788	207 4822 528 81476	227 4822 403 30785
191 4822 492 42407	208 4822 529 10282	228 4822 528 20752
192 4822 522 32737	209 4822 256 91936	

CS 33 187

EXPLODED VIEW: LIST OF MECHANICAL PARTS CASSETTE DECK

401	4822 443 41368	
402	4822 413 31794	
403	4822 492 20058	
404	4822 443 63663	
406	4822 443 63564	
407	4822 443 63565	
408	4822 443 63664	
409	4822 403 70658	
411	4822 403 70659	
412	4822 410 61747	
413	4822 403 70656	
414	4822 381 11493	
416	4822 492 52395	
417	4822 410 63169	
418	4822 410 61748	
419	4822 146 31351	/00S
	4822 146 31379	/17S
421	4822 267 31768	
422	4822 464 51033	
423	4822 464 51034	
424	4822 450 62213	
426	4822 403 70657	
427	4822 528 90849	
428	4822 255 30221	
429	4822 381 11493	
431	4822 272 20077	
432	4822 410 63168	
433	4822 410 63171	
434	4822 321 10767	/00S
	4822 321 11068	/17S
436	4822 325 50164	/00S
	4822 325 50228	/17S
437	4822 256 92182	
439	4822 267 41153	
441	4822 462 41888	
442	4822 462 41887	

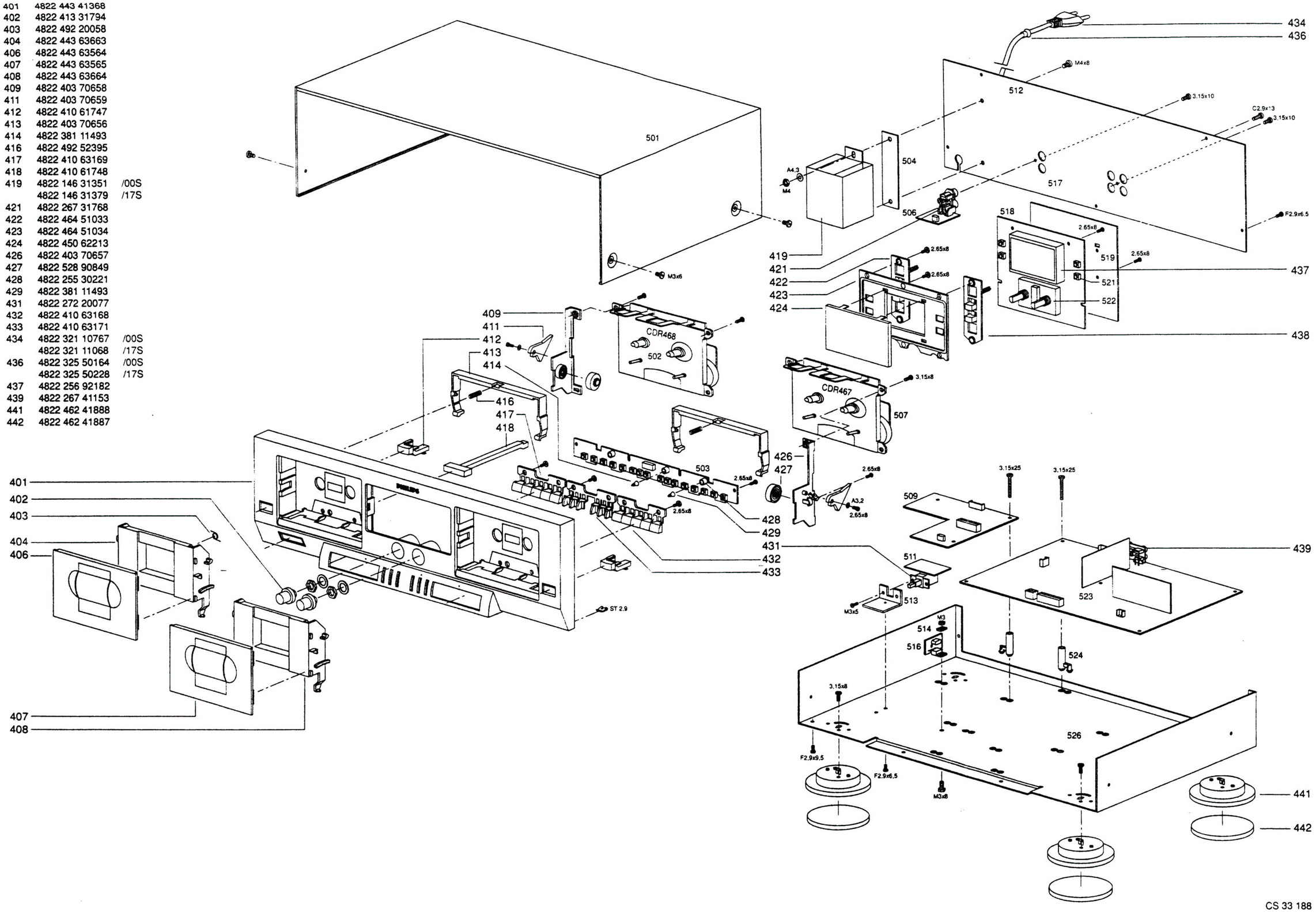

CS 33 188

LIST OF ELECTRICAL PARTS

4822 209 33348	IC M 38172-M4-XXM FP
4822 209 33349	IC X 24 C 00P
4822 209 83077	IC BA 6251
4822 209 80891	IC MHz 78 M 5 CT
4822 209 33347	IC LM 340 AT-12
4822 209 31009	IC CXA 1330 S
5322 209 10357	IC 4066 B/14066 B CP

4822 130 44283	BC 636
4822 130 41246	BC 327-25
4822 130 44197	BC 558 B
4822 130 40937	BC 548 B
4822 130 44196	BC 548 C
5322 130 44779	BC 338-40
4822 130 40981	BC 337-25
4822 130 41096	BC 550 C
4822 130 61755	BC 560 C
4822 130 44568	BC 557 B

4822 130 82954	LE DIODE LTL 4232 N
4822 130 82955	LE DIODE LTL 4212 N
5322 130 30684	DIODE 1 N 4002
4822 130 30621	DIODE 1 N 4148
4822 130 31981	Z DIODE 3,9 C 0.5W
4822 130 80515	Z DIODE 5,1 C 0,5W
4822 130 82753	Z DIODE 24 C 0,5W

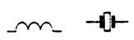

F 101	4822 242 72602	FILTER KM 10 DF
F 102	4822 242 72602	FILTER KM 10 DF
L 101	4822 157 63815	DR AX 0411-GA 4.7MH
L 102	4822 157 63815	DR AX 0411-GA 4.7MH
L 106	4822 157 60198	OSCILLATOR-COIL

C 10	4822 126 11805	SI-CERCO.A 3300pF 20%
C 203	4822 124 23498	ELCO CB 3300µF 20%
C 207	4822 124 23498	ELCO CB 3300µF 20%
C 136	4822 125 50415	TR.17 15/100pF VCT
C 146	4822 125 50415	TR.17 15/100pF VCT

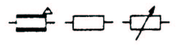

R 201	4822 116 81858	KSW SI B 10 5%
R 297	4822 116 53664	KSW SI B 47 5%
R 298	4822 116 81858	KSW SI B 10 5%
R 299	4822 116 83526	KSW SI A 22 5%
R 51	4822 101 11315	ESTR.P6/A 22 K LIN
R 54	4822 101 11314	ESTR.P6/A 10 K LIN
R 58	4822 101 11315	ESTR.P6/A 22 K LIN
R 61	4822 101 11314	ESTR.P6/A 10 K LIN
R 213	4822 101 11316	ESTR.S6 10 K LIN
R 215	4822 101 11316	ESTR.S6 10 K LIN
R 231	4822 101 11317	ESTR.S6 22 K LIN
R 257	4822 101 11317	ESTR.S6 22 K LIN
R 337	5322 101 11109	ESTR.S6 2,2 K LIN
R 353	4822 101 11317	ESTR.S6 22 K LIN
R 354	4822 101 11317	ESTR.S6 22 K LIN
R 395	4822 101 11317	ESTR.S6 22 K LIN
R 397	4822 101 11317	ESTR.S6 22 K LIN
RP 1	4822 101 21191	POTENTIOMETER / REC. BAL.
RP 2	4822 101 21189	POTENTIOMETER / REC. LEVEL

MISCELLANEOUS

502	4822 691 20734	TAPE DRIVE CRD 468	
507	4822 691 20735	TAPE DRIVE CRD 467	
DP 1	4822 130 91342	FTD DISPLAY	
F 200	4822 071 58001	FUSE 800 MA/T	/00S
	4822 253 50159	FUSE 1.25 A/T WIC	/17S
F 201	4822 071 52001	FUSE 200 MA/T	/00S
	4822 253 50158	FUSE 200 MA/T WIC	/17S
	4822 276 13152	TIP SWITCH	